Axopar 29 CCX Appendices
Axopar 29 Sun-Top Appendices
Axopar 29 XC Cross Cabin Appendices

Table of Contents

1 Appendix I Fuel system....3

2 Appendix II Electrical diagrams....4

3 Appendix III AIS Decontamination – North America....5

4 Appendix IV Transport dimensions....6

5 Appendix V Warranty terms....7

© 2026 Axopar Boats

1 Appendix I Fuel system

© 2026 Axopar Boats

CCX Fuel system: USA (EPA)

© 2026 Axopar Boats

Neoprene strips on tank

REVISIONS			
REV.	DESCRIPTION	DATE	APPROVED
A	Deck filler and Tank ventilator positions are updated, gasket added.	7.4.2025.	
B	Carbon canister has been replaced	27.10.2025.	

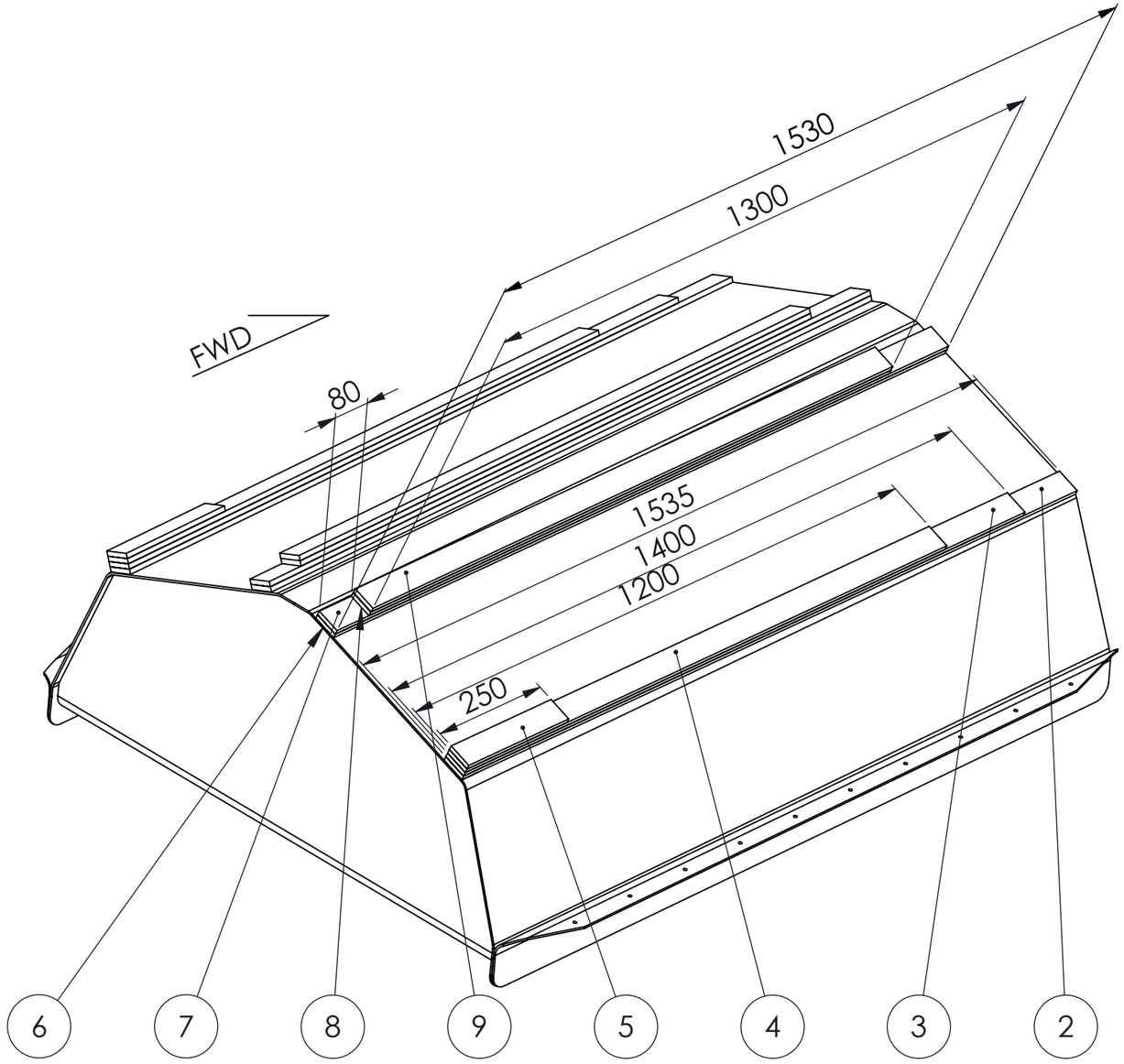

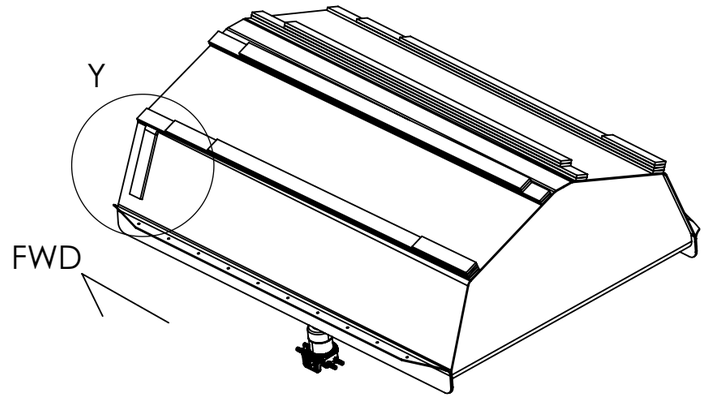

SCALE 1 : 20

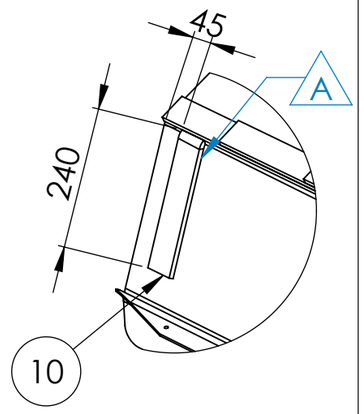

DETAIL Y

This drawing is to be used in both EU and EPA fuel systems

Total length of AXO3000305 Neoprene strips: 20,39m ~ 21m

PART NO.	ITEM	DESCRIPTION	MATERIAL	SIZE, CAPACITY	LENGTH (mm)	QTY.
1	AXO8000480, A	FUEL TANK	ALUMINIUM		-	1
2	AXO3000305, A	GASKET	PLASTIC, PE	50 X 10, 60KG / M3	1535	2
3	AXO3000305, A	GASKET	PLASTIC, PE	50 X 10, 60KG / M3	1400	1
4	AXO3000305, A	GASKET	PLASTIC, PE	50 X 10, 60KG / M3	1200	1
5	AXO3000305, A	GASKET	PLASTIC, PE	50 X 10, 60KG / M3	250	1
6	AXO3000305, A	GASKET	PLASTIC, PE	50 X 10, 60KG / M3	1530	1
7	AXO3000305, A	GASKET	PLASTIC, PE	50 X 10, 60KG / M3	1530	1
8	AXO3000305, A	GASKET	PLASTIC, PE	50 X 10, 60KG / M3	1450	1
9	AXO3000305, A	GASKET	PLASTIC, PE	50 X 10, 60KG / M3	1300	1
10	AXO3000305, A	GASKET	PLASTIC, PE	50 x 10 60 KG / M3	240	1

A

- No part of the fuel tank should directly touch laminate,add foams accordingly in case of laminate manufacturing inconsistency

This document and the information contained in it is proprietary and confidential information of Axopar Boats Oy. Neither this document nor any of the information contained herein may be reproduced, disclosed to others, or used for any purpose other than for the purpose it has been provided without the prior written permission of Axopar Boats Oy.

AXOPAR

BOAT MODEL AX28	MODEL YEAR 2025	ITEM AXO9002703	REV A
		DRAWING DRW01997	REV B

	BY	DATE	DESCRIPTION	SCALE	PAGE
CREATED	ANTZUL	08.07.2024	FUEL SYSTEM & EU	1:10	1 / 4
CHECKED	L.C.	08.07.2024	TECHNICAL DESCRIPTION		
ACCEPTED			Manufacturing specification		

PULS YACHT DESIGN

BOM

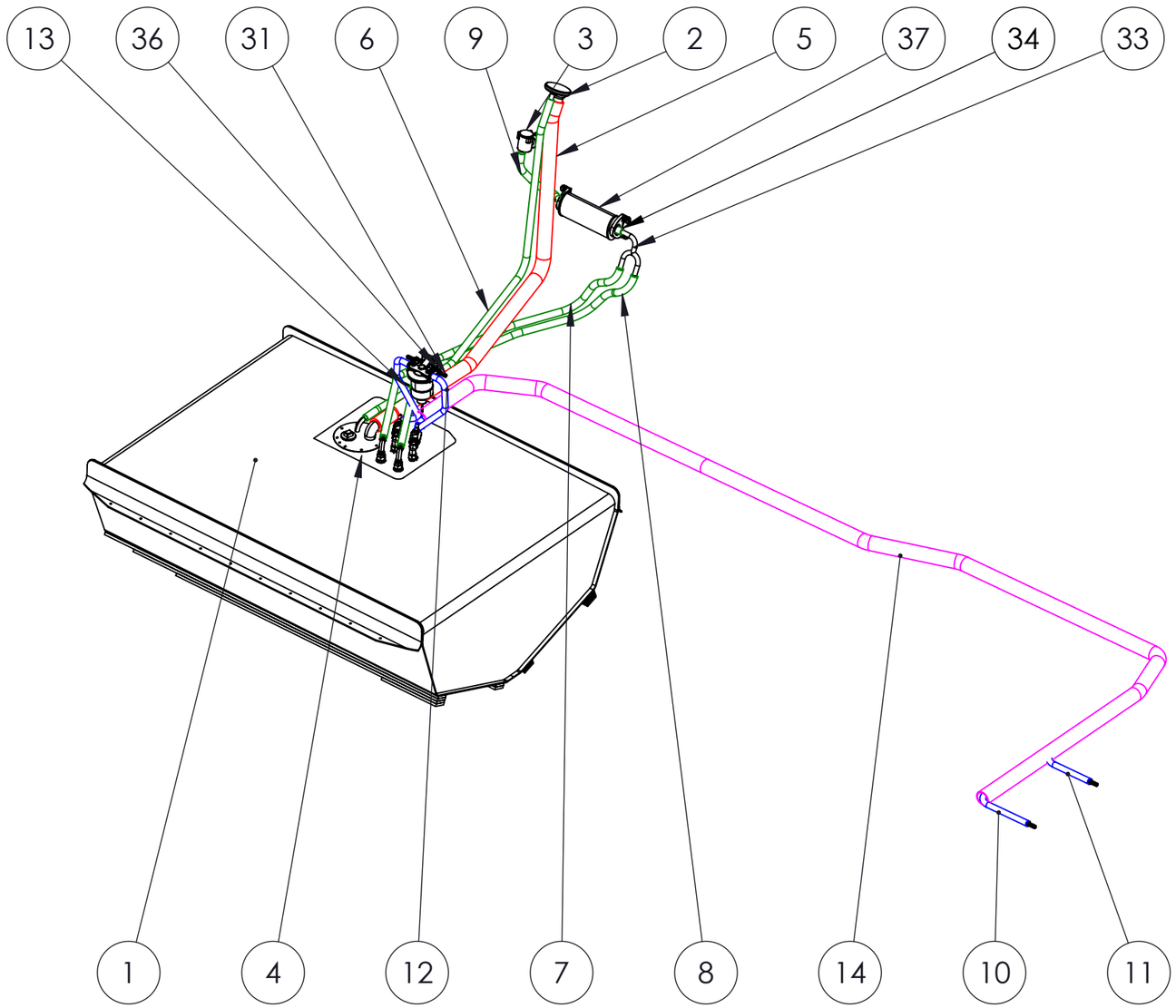

REVISIONS			
REV.	DESCRIPTION	DATE	APPROVED
A	Deck filler and Tank ventilator positions are updated	7.4.2025.	
B	Carbon canister has been replaced	27.10.2025.	

NOTE:
Fuel supply:
- 2nd line OPTION for 2x V6 engines
+ 2x ∅12 hose connector (AXO5000087)
- Fuel filter kit OPTION (AXO5000407) for 1x V10 engine +2x ∅12 hose connector (AXO5000087)

	PART NO.	ITEM	DESCRIPTION	MATERIAL	SIZE, CAPACITY	LENGTH (m)	QTY.
	1	AXO8000480, A	FUEL TANK	ALUMINIUM	608,9L		1
	2	AXO8000324, A	DECK FILLER	BRONZE, CHROMED CAP, PLASTIC BODY	ø38MM / ø16MM		1
	3	AXO8000082, A	TANK VENTILATOR		ø16MM, (5/8")		1
	4	AXO8000081, A	CHECK VALVE	PLASTIC	ø38MM, (1-1/2")		1
	5	AXO8000040, A	FUEL HOSE	NBR RUBBER	ø38	1,7	1
	6	AXO8000041, A	FUEL HOSE	NBR RUBBER	ø16	1,7	1
	7	AXO8000041, A	FUEL HOSE	NBR RUBBER	ø16	1,5	1
	8	AXO8000041, A	FUEL HOSE	NBR RUBBER	ø16	1,5	1
	9	AXO8000041, A	FUEL HOSE	NBR RUBBER	ø16	0,35	1
	10	AXO8000418, A	FUEL HOSE	NBR RUBBER, PLASTIC	ø12.7	4,8	1
	11	AXO8000418, A	FUEL HOSE	NBR RUBBER, PLASTIC	ø12.7	4,5	1
	12	AXO8000418, A	FUEL HOSE	NBR RUBBER, PLASTIC	ø12.7	0,3	1
	13	AXO8000418, A	FUEL HOSE	NBR RUBBER, PLASTIC	ø12.7	0,3	1
	14	AXO0000456, A	PROTECTIVE HOSE	PLASTIC	ø54 / ø47	4,5	1
	31	AXO5000087, A	FITTING	BRASS	ø12MM (3/8-18 X 1/2")		6
OPT	32	AXO8000122, A	IN-LINE SURGE PROTECTOR	PLASTIC	ø16		1
	33	AXO8000522, A	Y-CONNECTOR				1
OPT	34	AXO8000041, A	FUEL HOSE	NBR RUBBER	ø16	1,55	1
	35	AXO3000305, A	GASKET	PLASTIC, PE	50 X 10, 60KG / M3		1
	36	AXO5000407, A	FUEL FILTER KIT				1
B	37	AXO8000568, A	CARBON CANISTER	PLASTIC	ø16MM/ ø16MM (5/8" - 5/8")		1

HOSES PLAN				
DESCRIPTION	ITEM	SIZE, m	LENGTH, m	COLOR
Fuel fill	AXO8000040	∅38	1,8	
Fuel supply	AXO8000418	∅12	10.1	
Vent	AXO8000041	∅16	5,5	
Protective	AXO0000270	∅46	4,3	

This document and the information contained in it is proprietary and confidential information of Axopar Boats Oy. Neither this document nor any of the information contained herein may be reproduced, disclosed to others, or used for any purpose other than for the purpose it has been provided without the prior written permission of Axopar Boats Oy.

AXOPAR

BOAT MODEL AX28	MODEL YEAR 2025	ITEM AXO9002703	REV A
		DRAWING DRW01997	REV B

	BY	DATE	DESCRIPTION	SCALE	PAGE
CREATED	ANTZUL	08.07.2024	FUEL SYSTEM & EU	1:20	2 / 4
CHECKED	L.C.	08.07.2024	TECHNICAL DESCRIPTION		
ACCEPTED			Manufacturing specification		

PULS YACHT DESIGN

Positions

REVISIONS			
REV.	DESCRIPTION	DATE	APPROVED
0			

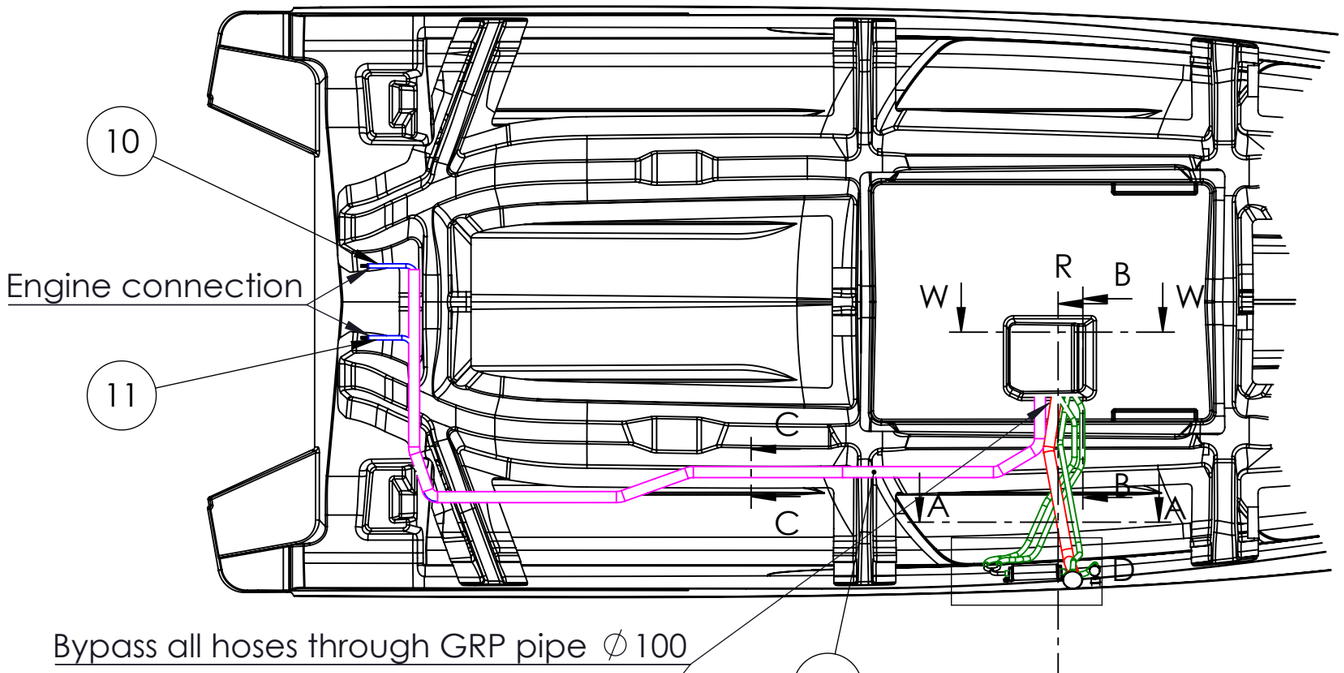

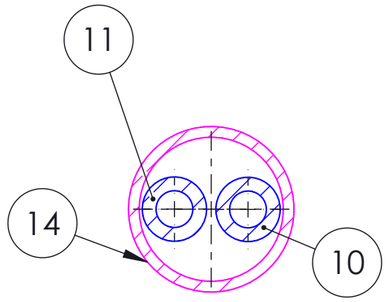

Fuel line in protective hose
SECTION C-C
SCALE 1 : 2

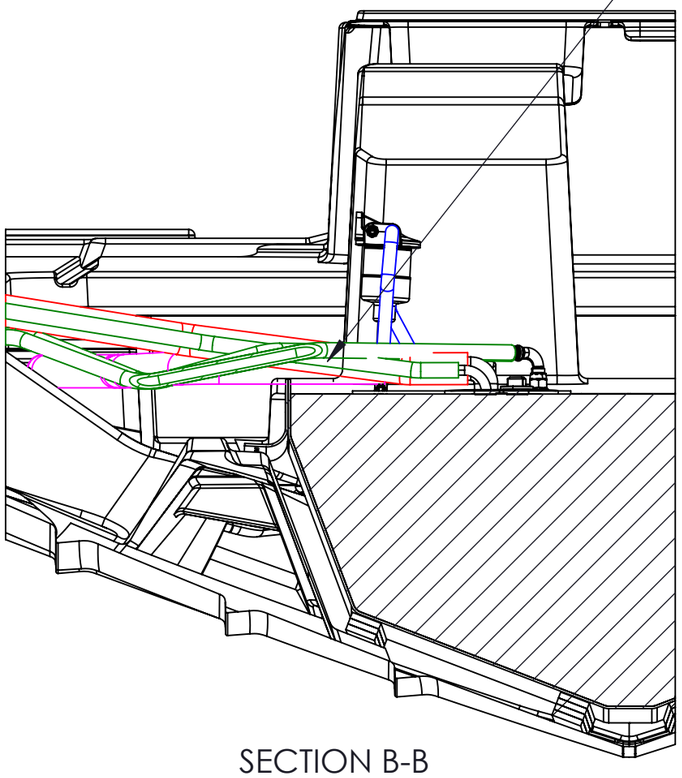

SECTION B-B
SCALE 1 : 10

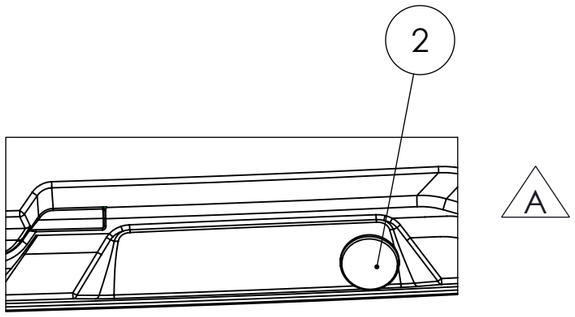

DETAIL D
SCALE 1 : 10
Deck filler position on the Deck
according Cut-out plan DRW02361

NOTE:
Fuel supply:
- 2nd line OPTION for 2x V6 engines
+ 2x ∅12 hose connector (AXO5000087)

HOSES PLAN				
DESCRIPTION	ITEM	SIZE, m	LENGTH, m	COLOR
Fuel fill	AXO8000040	∅38	1,8	
Fuel supply	AXO8000418	∅12	10,1	
Vent	AXO8000041	∅16	5,5	
Protective	AXO0000270	∅46	4,3	

This document and the information contained in it is proprietary and confidential information of Axopar Boats Oy. Neither this document nor any of the information contained herein may be reproduced, disclosed to others, or used for any purpose other than for the purpose it has been provided without the prior written permission of Axopar Boats Oy.

AXOPAR			ITEM AXO9002703		REV A
BOAT MODEL AX28		MODEL YEAR 2025	DRAWING DRW01997		REV B
	BY	DATE	DESCRIPTION	SCALE	PAGE
CREATED	ANTZUL	08.07.2024	FUEL SYSTEM & EU	1:30	3 / 4
CHECKED	L.C.	08.07.2024	TECHNICAL DESCRIPTION		
ACCEPTED			Manufacturing specification		

PULS YACHT DESIGN

REVISIONS			
REV.	DESCRIPTION	DATE	APPROVED
A	Deck filler and Tank ventilator positions are updated	7.4.2025.	

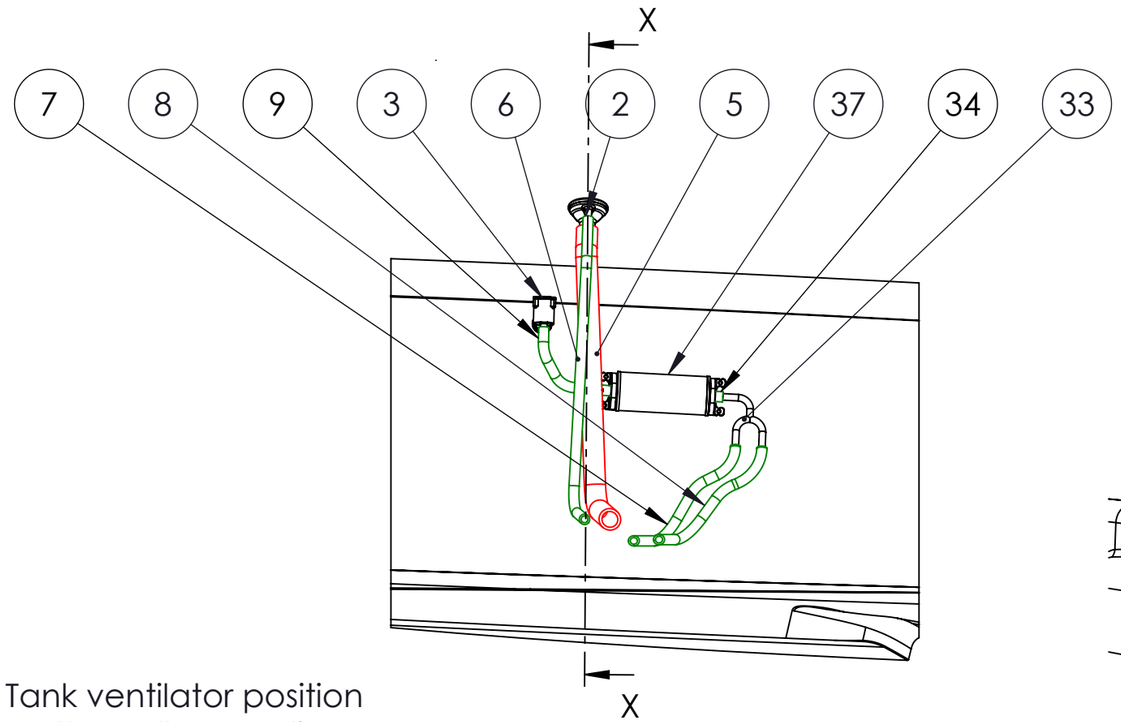

SECTION A-A
SCALE 1 : 15

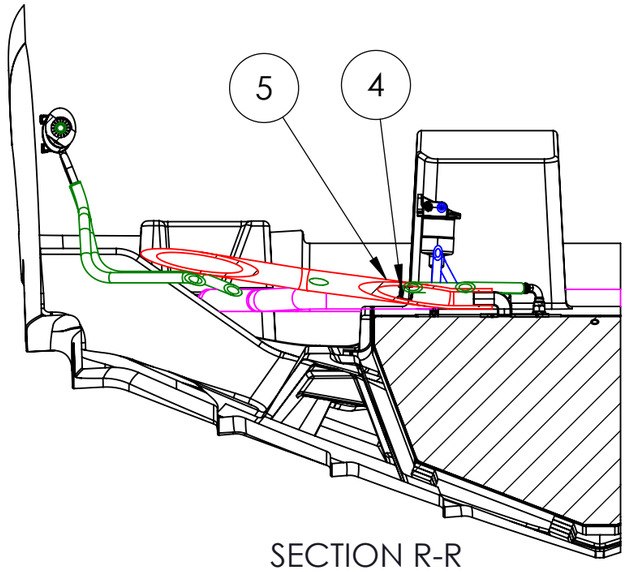

SECTION R-R
Check valve
SCALE 1 : 15

Tank ventilator position
on the Hull according
Cut-out DRW02047

A

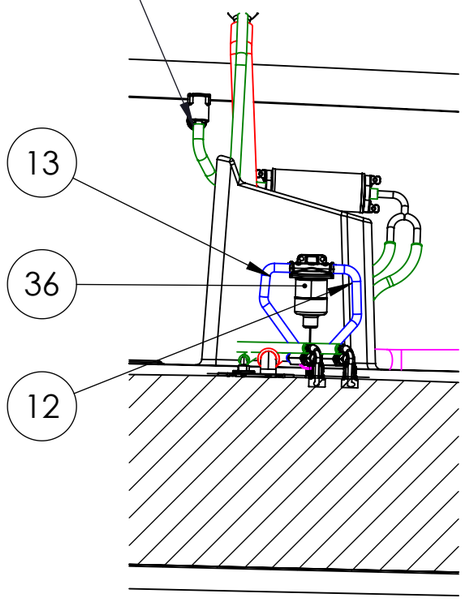

SECTION W-W
Fuel filter position
SCALE 1 : 15

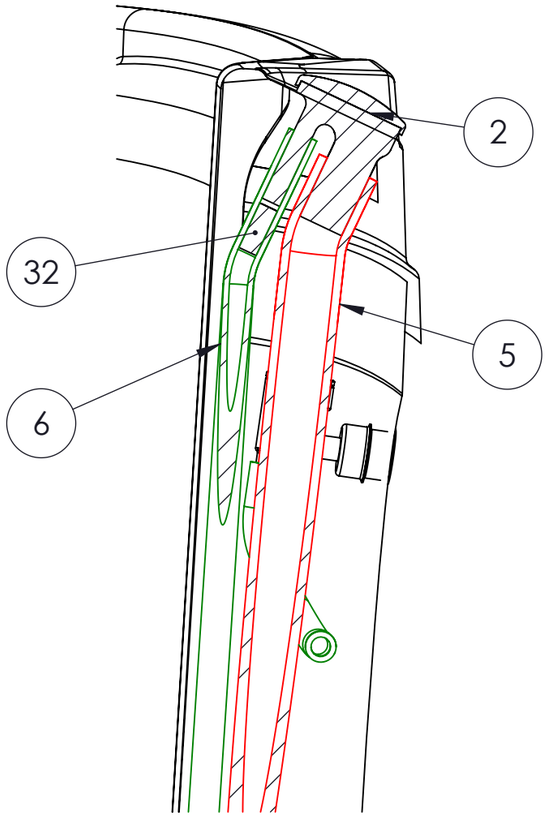

SECTION X-X
SCALE 1 : 5
Inline surge protector

NOTE :
-Check valve (AXO8000081) is installed inside fuel fill line, near tank connection, aprox 200 mm.
- Fuel filter kit OPTION (AXO5000407) for 1x V10 engine +2x ∅12 hose connector (AXO5000087)

This document and the information contained in it is proprietary and confidential information of Axopar Boats Oy. Neither this document nor any of the information contained herein may be reproduced, disclosed to others, or used for any purpose other than for the purpose it has been provided without the prior written permission of Axopar Boats Oy.

AXOPAR

ITEM	REV
AXO9002703	A

BOAT MODEL	MODEL YEAR	DRAWING	REV
AX28	2025	DRW01997	B

	BY	DATE	DESCRIPTION	SCALE	PAGE
CREATED	ANTZUL	08.07.2024	FUEL SYSTEM & EU	1:30	4 / 4
CHECKED	L.C.	08.07.2024	TECHNICAL DESCRIPTION		
ACCEPTED			Manufacturing specification		

PULS YACHT DESIGN

ST and XC Fuel system: EU

© 2026 Axopar Boats

Insulation foam on tank

REVISIONS			
REV.	DESCRIPTION	DATE	APPROVED
A	Removed fuel filter and 2x fittings from structure	18.10.2024.	
B	Updated according to production	07.12.2024.	
C	Protective hose removed, note added.	17.12.2024.	
D	Insulation updated.	28.1.2025.	
E	Surge protector location updated	21.3.2025.	

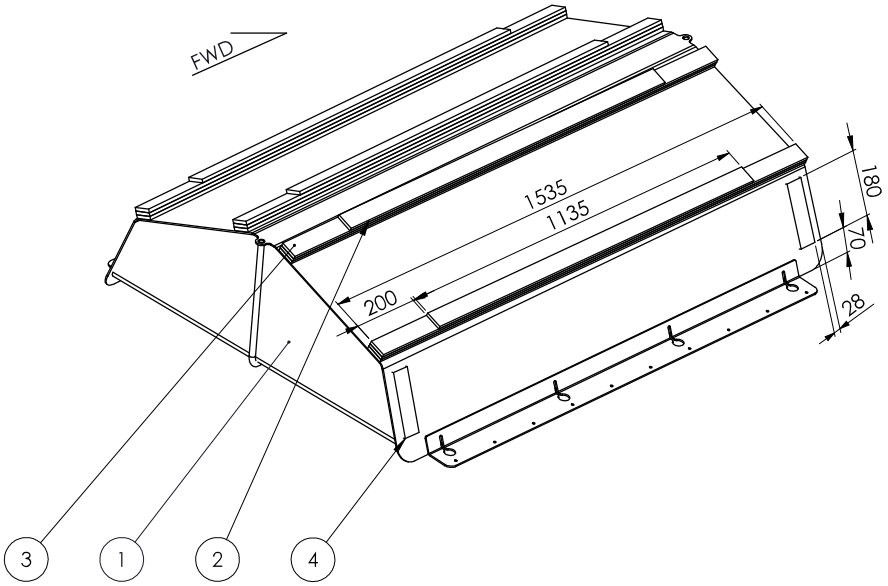

Total length of AXO1001170: 23,68m ~ 24m

PART NO.	ITEM	DESCRIPTION	MATERIAL	SIZE, CAPACITY	LENGTH (mm)	QTY.
1	AXO8000383, A	FUEL TANK	ALUMINIUM		-	1
2	AXO1001170, A	INSULATION	FOAM	2000x50x10	1135	4
3	AXO1001170, A	INSULATION	FOAM	2000x50x10	1535	12
4	AXO7001170, A	INSULATION	FOAM	2000x50x10	180	4

D

NOTE:

D - No part of fuel tank should directly touch laminate, add foams accordingly in case of laminate manufacturing inconsistency.

This document and the information contained in it is proprietary and confidential information of Axopar Boats Oy. Neither this document nor any of the information contained herein may be reproduced, disclosed to others, or used for any purpose other than for the purpose it has been provided without the prior written permission of Axopar Boats Oy.

AXOPAR

ITEM	REV
AXO9001502	D

BOAT MODEL	MODEL YEAR	DRAWING	REV
AX28	2023	DRW01088	E

	BY	DATE	DESCRIPTION	SCALE	PAGE
CREATED	ANTMIH	23.05.2023	FUEL SYSTEM	1:10	1 / 4
CHECKED	L.C.	23.05.2023	TECHNICAL DESCRIPTION		
ACCEPTED	VILVUO	12.09.2023	Manufacturing specificatiom		

PULS YACHT DESIGN

REVISIONS			
REV.	DESCRIPTION	DATE	APPROVED
B	Updated according to production	7.12.2023	
A	Removed fuel filter and 2x fittings from structure	18.10.2023	
C	Protective hose removed, note added	17.12.2024.	
E	Surge protector location updated	21.3.2025.	

BOM

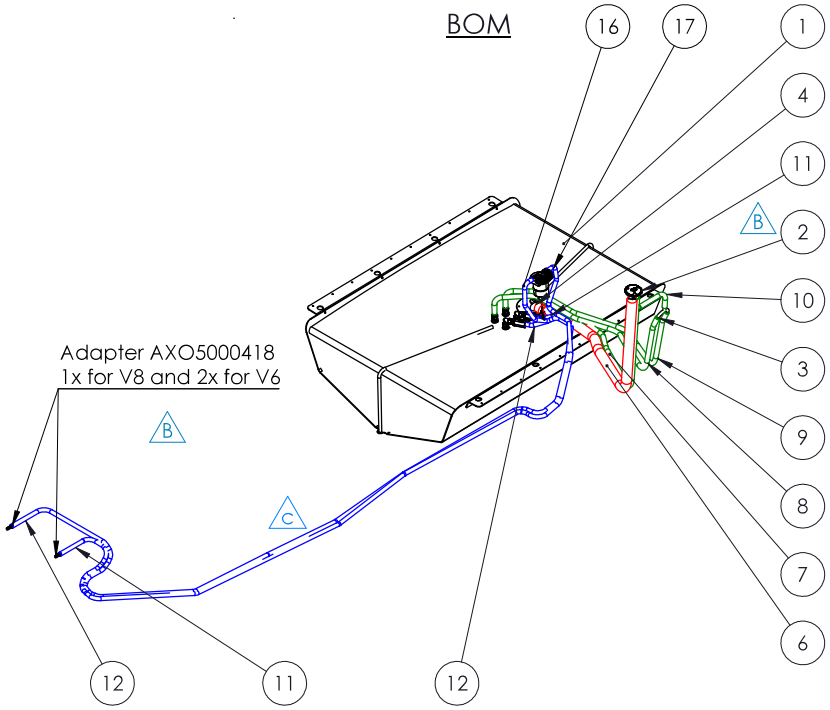

NOTE:

Fuel supply:

A - 2nd line OPTION for 2x V6 engines

- Fuel tank 2nd line connector AXO8000452

B - Fuel filter kit OPTION (AXO5000407) for 1xV10 engine + fuel tank 2nd line 2x connector axo8000452

C - Fuel lines are passing through the corrugated pipe,laminated into the stringer

PART NO.	ITEM	DESCRIPTION	MATERIAL	SIZE, CAPACITY	QTY.
1	AXO8000383, A	FUEL TANK	ALUMINIUM		1
2	AXO8000031, A	DECK FILLER (FUEL)	PLASTIC /CHROME	ø38, ø16	1
3	AXO8000086, A	T-CONNECTOR	ALUMINIUM	ø16	1
4	AXO8000090, A	T-CONNECTOR	PLASTIC, POM	ø16	1
5	AXO8000081, A	CHECK VALVE		ø38MM, (1-1/2")	1
6	AXO8000040, A	FUEL HOSE	NBR RUBBER	ø38	1
7	AXO8000041, A	FUEL HOSE	NBR RUBBER	ø16	1
8	AXO8000041, A	FUEL HOSE	NBR RUBBER	ø16	1
9	AXO8000041, A	FUEL HOSE	NBR RUBBER	ø16	1
10	AXO8000041, A	FUEL HOSE	NBR RUBBER	ø16	1
11	AXO8000042, A	FUEL HOSE	NBR RUBBER	ø12	1
12	AXO8000042, A	FUEL HOSE	NBR RUBBER	ø12	1
13	AXO5000087, A	FITTING	BRASS	ø12MM (3/8-18 X 1/2")	2
14	AXO8000122, A	IN-LINE SURGE PROTECTOR	PLASTIC	ø16	1
15	AXO5000407, A	FUEL FILTER KIT			1
16	AXO8000042, A	FUEL HOSE	NBR RUBBER	ø12	1
17	AXO8000042, A	FUEL HOSE	NBR RUBBER	ø12	1

B

HOSES PLAN				
DESCRIPTION	ITEM	SIZE, m	LENGTH, m	COLOR
Fuel fill	AXO8000040	Ø38	1,8	
Fuel supply (single engine)	AXO8000042	Ø12	8	
Fuel supply (double engine)	AXO8000042	Ø12	13	
Vent	AXO8000041	Ø16	5,6	
Protective	AXO0000270	Ø46	4,3	

This document and the information contained in it is proprietary and confidential information of Axopar Boats Oy. Neither this document nor any of the information contained herein may be reproduced, disclosed to others, or used for any purpose other than for the purpose it has been provided without the prior written permission of Axopar Boats Oy.

AXOPAR

ITEM	REV
AXO9001502	D

BOAT MODEL	MODEL YEAR	DRAWING	REV
AX28	2023	DRW01088	E

	BY	DATE	DESCRIPTION	SCALE	PAGE
CREATED	ANTMIH	23.05.2023	FUEL SYSTEM	1:20	2 / 4
CHECKED	L.C.	23.05.2023	TECHNICAL DESCRIPTION		
ACCEPTED	VILVUO	12.09.2023	Manufacturing specificatiom		

PULS YACHT DESIGN

Positions

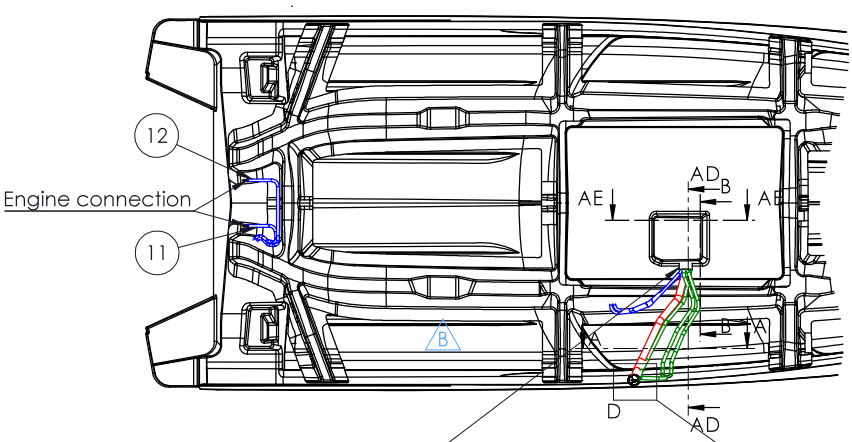

Bypass all hoses through GRP pipe ∅100

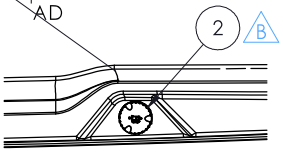

Detail D
Position on Deck
SCALE 1:10

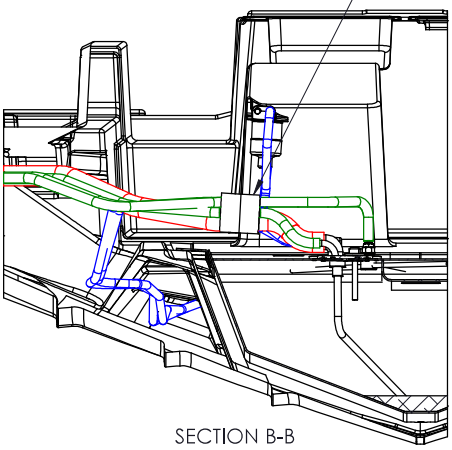

SECTION B-B
SCALE 1 : 10

REVISIONS			
REV.	DESCRIPTION	DATE	APPROVED
A	Removed fuel filter and 2x fittings from structure	18.10.2023.	AJu
B	Updated according to production	7.12.2023.	

NOTE:
Fuel supply:
- 2nd line OPTION for 2x V6 engines
- Fuel tank 2nd line connector AXO8000452
- Fuel filter kit OPTION (AXO5000407) for 1xV10 engine + fuel tank 2nd line 2x connector axo8000452

B

HOSES PLAN				
DESCRIPTION	ITEM	SIZE, m	LENGTH, m	COLOR
Fuel fill	AXO8000040	∅38	1,8	
Fuel supply (single engine)	AXO8000042	∅12	8	
Fuel supply (double engine)	AXO8000042	∅12	13	
Vent	AXO8000041	∅16	5,6	
Protective	AXO0000270	∅46	4,3	

This document and the information contained in it is proprietary and confidential information of Axopar Boats Oy. Neither this document nor any of the information contained herein may be reproduced, disclosed to others, or used for any purpose other than for the purpose it has been provided without the prior written permission of Axopar Boats Oy.

AXOPAR

ITEM	REV
AXO9001502	D

BOAT MODEL	MODEL YEAR	DRAWING	REV
AX28	2023	DRW01088	E

	BY	DATE	DESCRIPTION	SCALE	PAGE
CREATED	ANTMIH	23.05.2023	FUEL SYSTEM	1:30	3 / 4
CHECKED	L.C.	23.05.2023	TECHNICAL DESCRIPTION		
ACCEPTED	VILVUO	12.09.2023	Manufacturing specificatiom		

PULS YACHT DESIGN

Positions

REVISIONS			
REV.	DESCRIPTION	DATE	APPROVED
A	Removed fuel filter and 2x fittings from structure	18.10.2023.	AJu
B	Updated according to production	7.12.2023.	
E	Surge protector location updated	21.3.2025.	

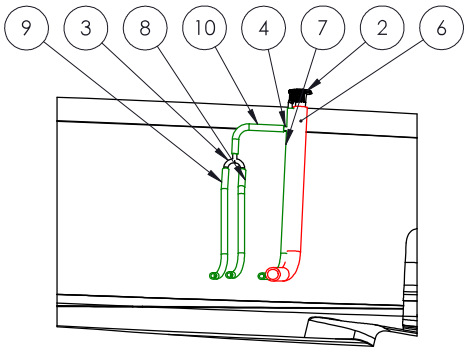

AF SECTION A-A
SCALE 1 : 15

Inline surge protector

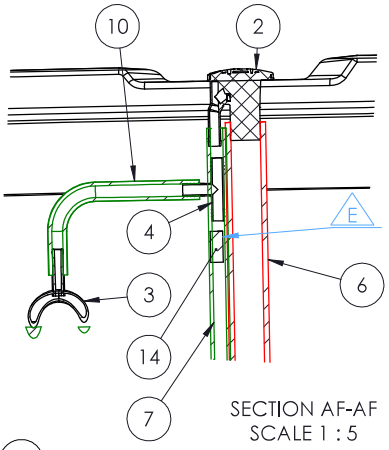

SECTION AF-AF
SCALE 1 : 5

Fuel filter position

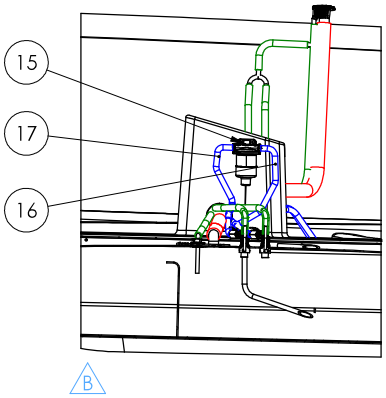

SECTION AE-AE
SCALE 1 : 15

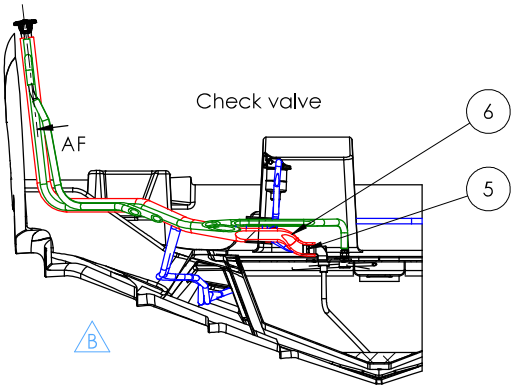

SECTION AD-AD
SCALE 1 : 15

This document and the information contained in it is proprietary and confidential information of Axopar Boats Oy. Neither this document nor any of the information contained herein may be reproduced, disclosed to others, or used for any purpose other than for the purpose it has been provided without the prior written permission of Axopar Boats Oy.

AXOPAR		ITEM AXO9001502	REV D
BOAT MODEL AX28	MODEL YEAR 2023	DRAWING DRW01088	REV E

	BY	DATE	DESCRIPTION	SCALE	PAGE
CREATED	ANTMIH	23.05.2023	FUEL SYSTEM	1:15	4 / 4
CHECKED	L.C.	23.05.2023	TECHNICAL DESCRIPTION		
ACCEPTED	VILVUO	12.09.2023	Manufacturing specificatiom		

PULS YACHT DESIGN

ST and XC Fuel system: USA (EPA)

© 2026 Axopar Boats

Insulation foam on tank

REVISIONS			
REV.	DESCRIPTION	DATE	APPROVED
A	Removed fuel filter and 2x fittings from structure	19.10.2023.	AJu
B	Changed fuel supply hoses	7.12.2023.	
C	Added inline surge protector, check valve and fuel filter kit	11.3.2024	
D	Updated according to production	2.8.2024.	
E	Y connector added, foam updated, protective hose removed.	21.1.2025.	

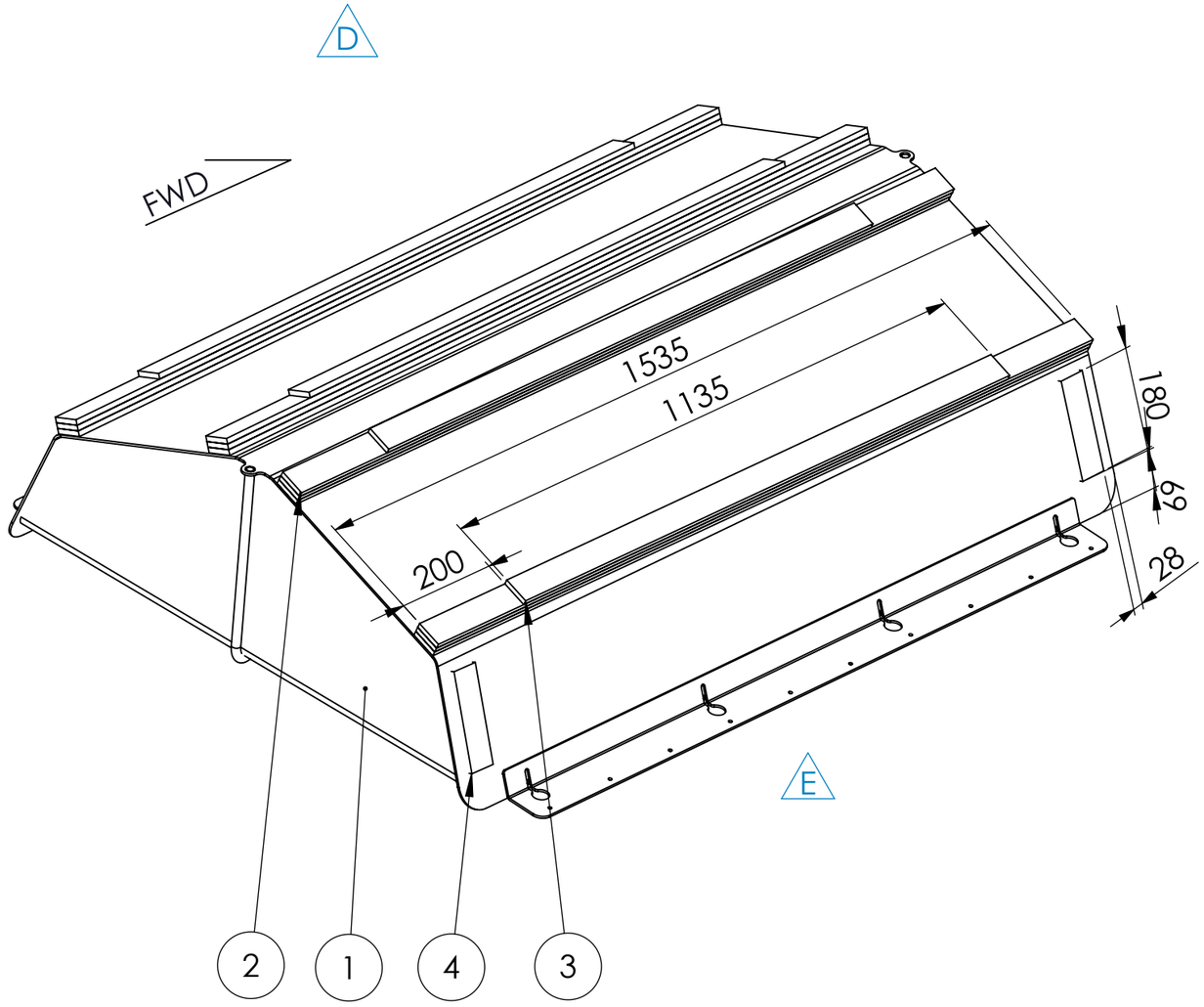

Total length of AXO1001170: 23,68m ~ 24m

PART NO.	ITEM	DESCRIPTION	MATERIAL	SIZE, CAPACITY	LENGTH (mm)	QTY.
1	AXO8000383, A	FUEL TANK	ALUMINIUM		-	1
2	AXO1001170, A	INSULATION	FOAM	2000x50x10	1535	12
3	AXO1001170, A	INSULATION	FOAM	2000x50x10	1135	4
4	AXO1001170, A	INSULATION	FOAM	2000x50x10	180	4

NOTE:
- No part of fuel tank should directly touch the laminate, add foams accordingly in case of laminate manufacturing inconsistency.

This document and the information contained in it is proprietary and confidential information of Axopar Boats Oy. Neither this document nor any of the information contained herein may be reproduced, disclosed to others, or used for any purpose other than for the purpose it has been provided without the prior written permission of Axopar Boats Oy.

AXOPAR		ITEM AXO9001503	REV E
BOAT MODEL AX28	MODEL YEAR 2023	DRAWING DRW01195	REV E

	BY	DATE	DESCRIPTION	SCALE	PAGE
CREATED	ANTMIH	01.06.2023	FUEL SYSTEM	1:10	1 / 4
CHECKED	L.C.	01.06.2023	TECHNICAL DESCRIPTION		
ACCEPTED	VILVUO	12.09.2023	Manufacturing specification		

PULS YACHT DESIGN

BOM

REVISIONS			
REV.	DESCRIPTION	DATE	APPROVED
A	Removed fuel filler and 2x fittings from structure	19.10.2023	AJu
B	Changed fuel supply hoses	7.12.2023	
C	Added fuel filter kit and inline surge protector	11.3.2024	
D	Fuel supply and protective hoses path updated	2.8.2024	
E	Y connector added, protective hose removed.	21.1.2025.	

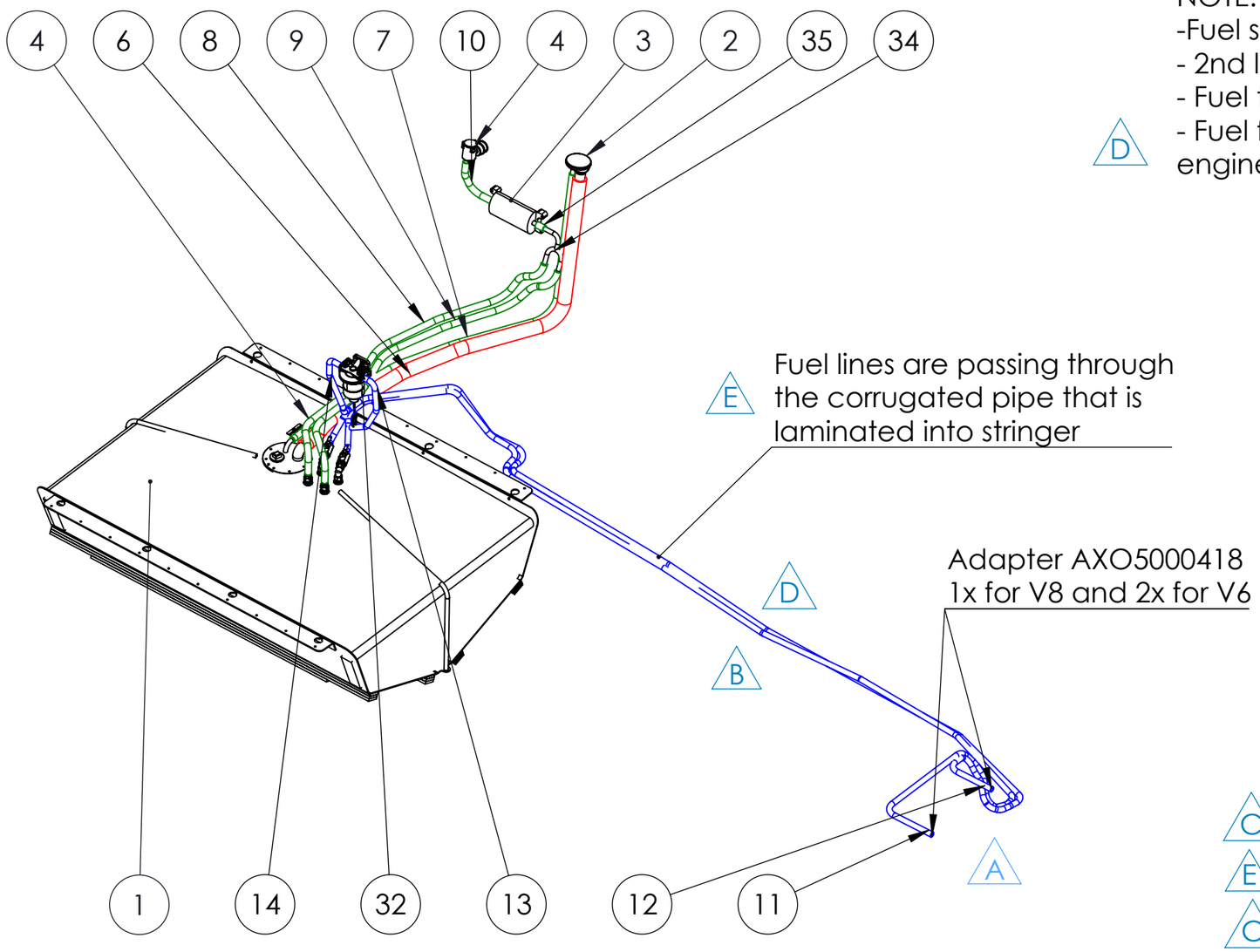

NOTE:
-Fuel supply:
- 2nd line OPTION for 2 engines
- Fuel tank 2nd line connector AXO8000452
- Fuel filter kit OPTION (AXO5000407) for 1xV10 engine + fuel tank 2nd line 2x connector AXO8000452

PART NO.	ITEM	DESCRIPTION	MATERIAL	SIZE, CAPACITY	QTY.
1	AXO8000383, A	FUEL TANK	ALUMINIUM		1
2	AXO8000324, A	DECK FILLER	BRONZE, CHROMED CAP, PLASTIC BODY	ø38MM / ø16MM	1
3	AXO8000083, A	CARBON CANISTER		ø16MM/ ø16MM (5/8" - 5/8")	1
4	AXO8000082, A	TANK VENTILATOR		ø16MM, (5/8")	1
5	AXO8000081, A	CHECK VALVE		ø38MM, (1-1/2")	1
6	AXO8000040, A	FUEL HOSE	NBR RUBBER	ø38	1
7	AXO8000041, A	FUEL HOSE	NBR RUBBER	ø16	1
8	AXO8000041, A	FUEL HOSE	NBR RUBBER	ø16	1
9	AXO8000041, A	FUEL HOSE	NBR RUBBER	ø16	1
10	AXO8000041, A	FUEL HOSE	NBR RUBBER	ø16	1
11	AXO8000418, A	FUEL HOSE		ø12.7	1
12	AXO8000418, A	FUEL HOSE		ø12.7	1
13	AXO8000418, A	FUEL HOSE		ø12.7	1
14	AXO8000418, A	FUEL HOSE		ø12.7	1
32	AXO5000407, A	FUEL FILTER KIT			1
33	AXO8000122, A	IN-LINE SURGE PROTECTOR	PLASTIC	ø16	1
34	AXO8000522, A	Y-CONNECTOR			1
35	AXO8000041, A	FUEL HOSE	NBR RUBBER	ø16	1

HOSES PLAN				
DESCRIPTION	ITEM	SIZE, m	LENGTH, m	COLOR
Fuel fill	AXO8000040	Ø38	1,8	
Fuel supply (single engine)	AXO8000418	Ø12	8	
Fuel supply (double engine)	AXO8000418	Ø12	13	
Vent	AXO8000041	Ø16	5,5	
Protective	AXO0000270	Ø46	4,3	

This document and the information contained in it is proprietary and confidential information of Axopar Boats Oy. Neither this document nor any of the information contained herein may be reproduced, disclosed to others, or used for any purpose other than for the purpose it has been provided without the prior written permission of Axopar Boats Oy.

AXOPAR

BOAT MODEL	MODEL YEAR	ITEM	REV
AX28	2023	AXO9001503	E
		DRAWING DRW01195	REV E

	BY	DATE	DESCRIPTION	SCALE	PAGE
CREATED	ANTMIH	01.06.2023	FUEL SYSTEM	1:20	2 / 4
CHECKED	L.C.	01.06.2023	TECHNICAL DESCRIPTION		
ACCEPTED	VILVUO	12.09.2023	Manufacturing specification		

PULS YACHT DESIGN

Positions

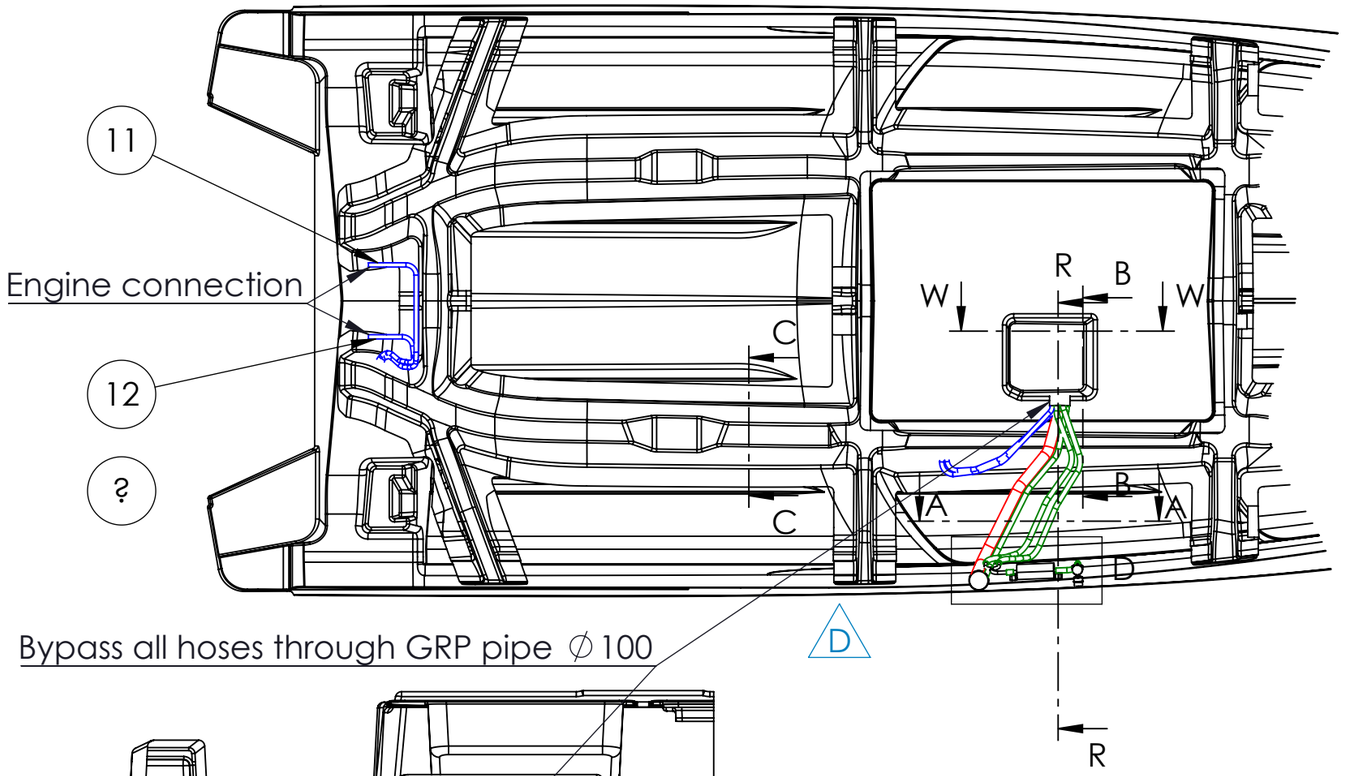

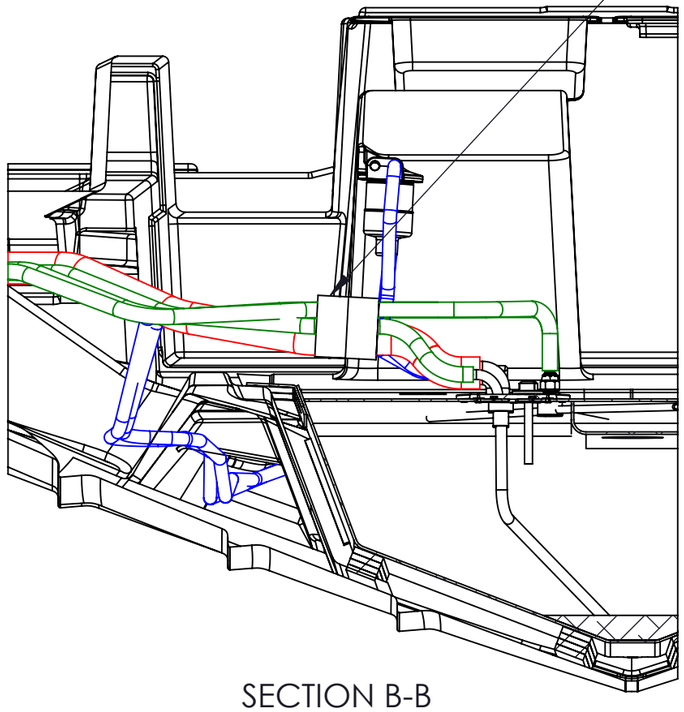

SECTION B-B
SCALE 1 : 10

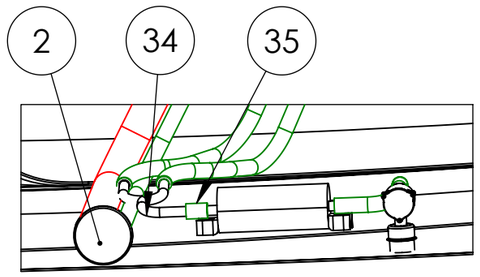

DETAIL D
SCALE 1 : 10

REVISIONS			
REV.	DESCRIPTION	DATE	APPROVED
A	Removed fuel filter and 2x fittings from structure	19.10.2023.	AJu
B	Changed fuel supply hoses	7.12.2023.	
D	Fuel supply and protective hoses path updated	2.8.2024.	
E	Y connector added, protective hose removed.	21.1.2025.	

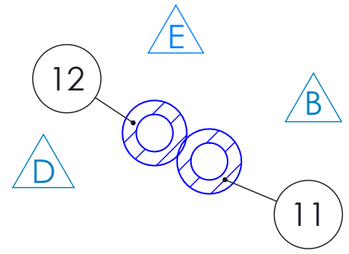

Fuel line in protective hose
SECTION C-C
SCALE 1 : 2

A NOTE:
-Fuel supply:
- 2nd line OPTION for 2 engines
- Fuel tank 2nd line connector AXO8000452
D - Fuel filter kit OPTION (AXO5000407) for 1xV10 engine + fuel tank 2nd line 2x connector AXO8000452

HOSES PLAN				
DESCRIPTION	ITEM	SIZE, m	LENGTH, m	COLOR
Fuel fill	AXO8000040	∅38	1,8	
Fuel supply (single engine)	AXO8000418	∅12	8	
Fuel supply (double engine)	AXO8000418	∅12	13	
Vent	AXO8000041	∅16	5,5	
Protective	AXO0000270	∅46	4,3	

This document and the information contained in it is proprietary and confidential information of Axopar Boats Oy. Neither this document nor any of the information contained herein may be reproduced, disclosed to others, or used for any purpose other than for the purpose it has been provided without the prior written permission of Axopar Boats Oy.

AXOPAR

ITEM	REV
AXO9001503	E

BOAT MODEL	MODEL YEAR	DRAWING	REV
AX28	2023	DRW01195	E

	BY	DATE	DESCRIPTION	SCALE	PAGE
CREATED	ANTMIH	01.06.2023	FUEL SYSTEM	1:30	3 / 4
CHECKED	L.C.	01.06.2023	TECHNICAL DESCRIPTION		
ACCEPTED	VILVUO	12.09.2023	Manufacturing specification		

PULS YACHT DESIGN

REVISIONS			
REV.	DESCRIPTION	DATE	APPROVED
C	Added sections R, M and W	11.3.2024	
E	Y connector added	21.1.2025.	

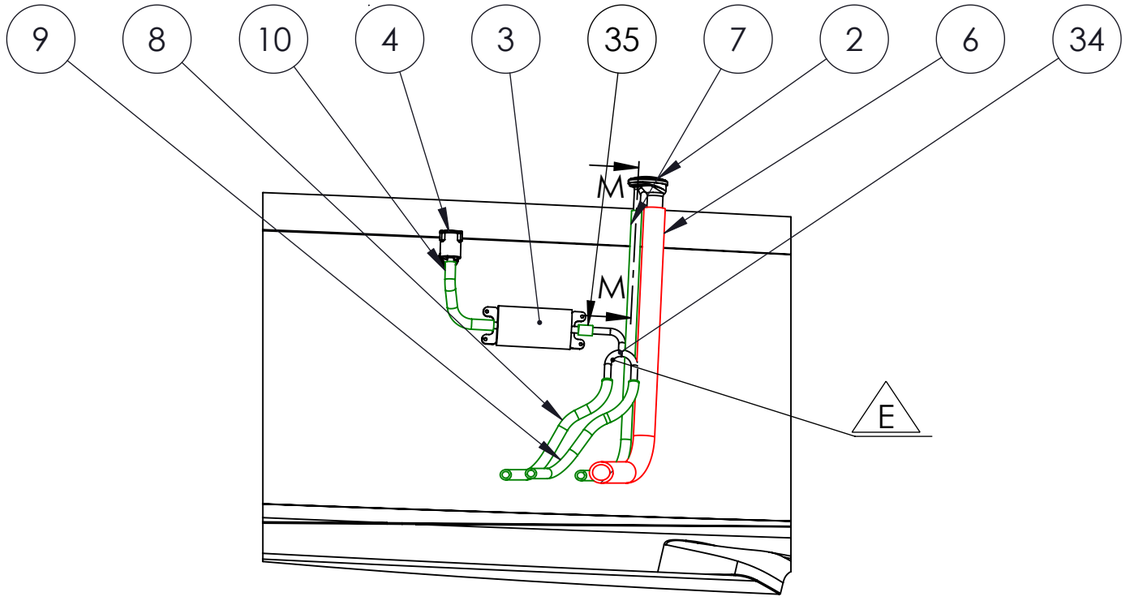

SECTION A-A
SCALE 1 : 15

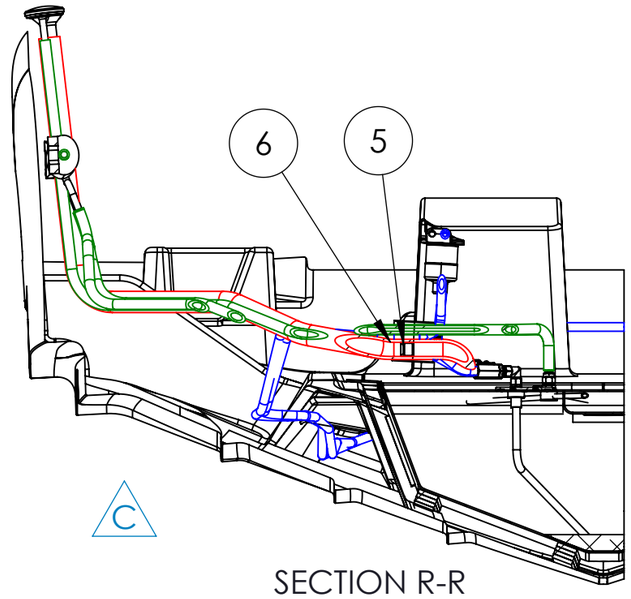

SECTION R-R
Check valve
SCALE 1 : 15

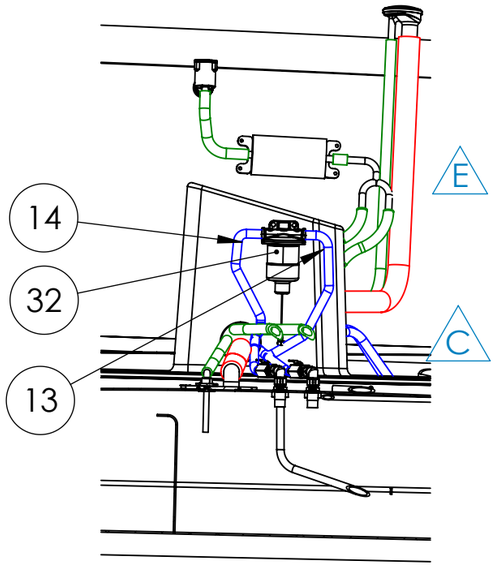

SECTION W-W
Fuel filter position
SCALE 1 : 15

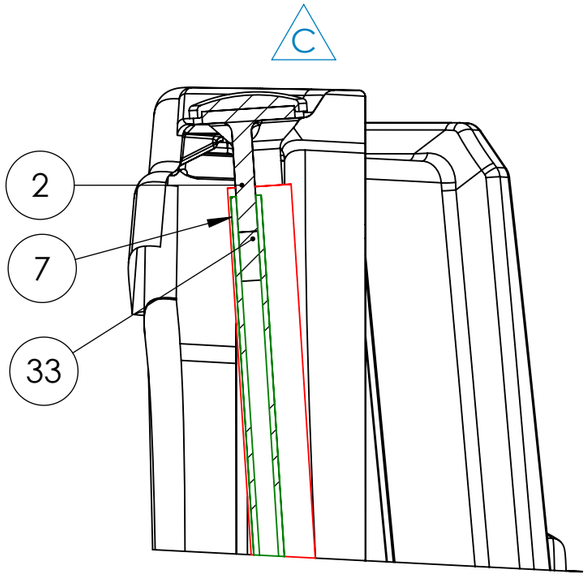

SECTION M-M
SCALE 1 : 5

NOTE :
-Check valve (AXO8000081) is installed inside fuel fill line, near tank connection, aprox 200 mm.
- Fuel filter kit OPTION (AXO5000407) for 1x V10 engine

This document and the information contained in it is proprietary and confidential information of Axopar Boats Oy. Neither this document nor any of the information contained herein may be reproduced, disclosed to others, or used for any purpose other than for the purpose it has been provided without the prior written permission of Axopar Boats Oy.

AXOPAR			ITEM AXO9001503	REV E	
BOAT MODEL AX28		MODEL YEAR 2023	DRAWING DRW01195	REV E	
	BY	DATE	DESCRIPTION	SCALE	PAGE
CREATED	ANTMIH	01.06.2023	FUEL SYSTEM	1:30	4 / 4
CHECKED	L.C.	01.06.2023	TECHNICAL DESCRIPTION		
ACCEPTED	VILVUO	12.09.2023	Manufacturing specification		

PULS YACHT DESIGN

2 Appendix II Electrical diagrams

Axopar 28 Mk3 230Vac SYSTEM LAYOUT

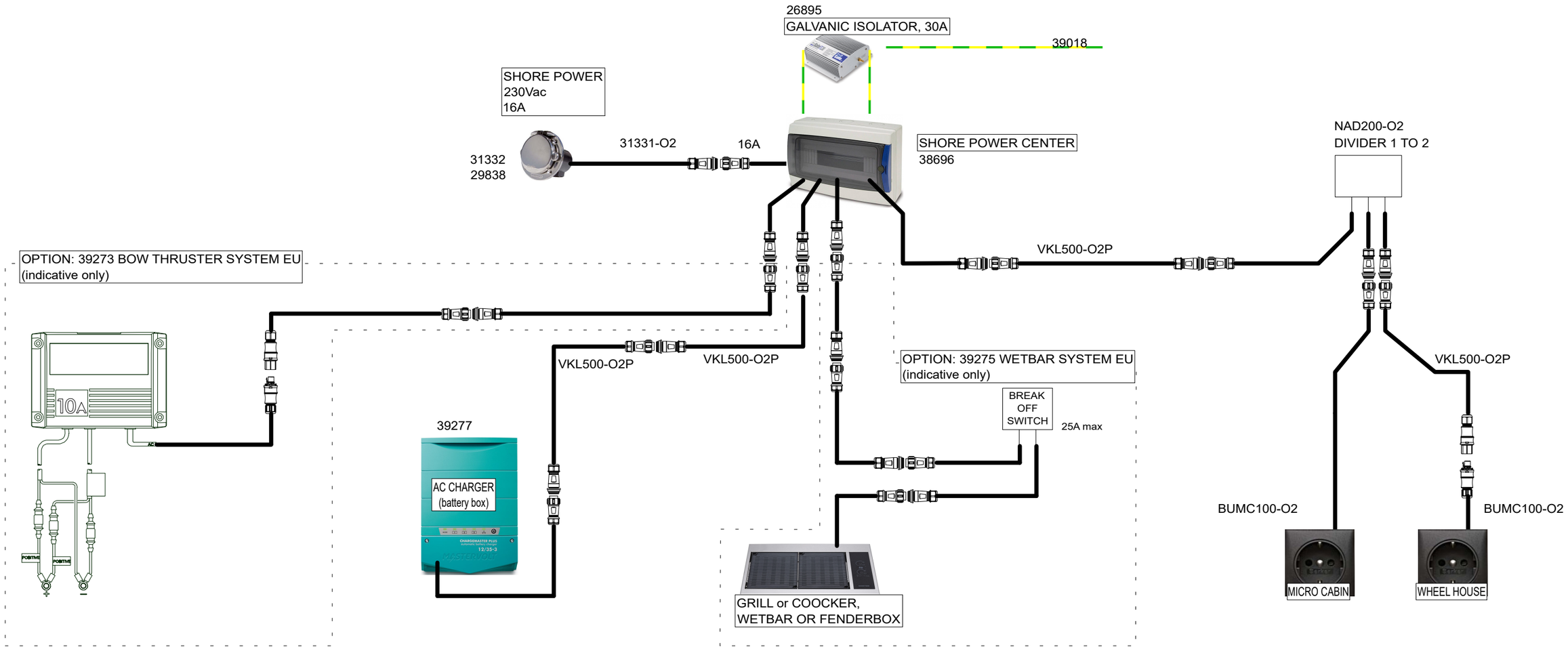

BASIC COMPONENTS
31332 - Shore Power Cable 16A/250V 25m - Ratio Electric 2822
29838 - SHORE POWER MLC ADAPTER 200mm - 2,5mm2 -
31331-O2 - Deck Contact 16A/250V S.S. IP56 - Ratio Electric MP16-10

26895 - Galvanic Isolator 30A, 120/240 VAC - ProSafe FS30
39018 - AC GROUNDING CABLE EURO - 1000CM 6mm2 WITH TUBE

38696 - Axopar 28 SHORE POWER CENTER EU -

4pcs VKL500-O2P - CONNECTION CABLE 500CM IP68 1,5 mm2 WITH TUBE -
39277 ChargeMaster Plus 12/35-3 with O2
NAD200-O2 - DIVIDER -
2pcs BUMC100-O2 - WALL SOCKET, single pos. flush mounting - Berker, matt chrome

13.2.2024	PF	B2: Removed 29189 (from inlet) & VKL100-O2P (from cabin socket)	Date 5.5.2023	NAVIX.	Axopar		38694	
			Drawing by PF		Boat	Sub-product code	Product code	Project ID
			Sheet rev. 2		28 MK3	SHORE POWER SYSTEM EU	HL	1/ 4
Date of modification	Modified by	Description	Project rev. B	Copyright by	Boat model	Title	Loc	Sheet

Axopar 28 Mk3 120Vac SYSTEM LAYOUT

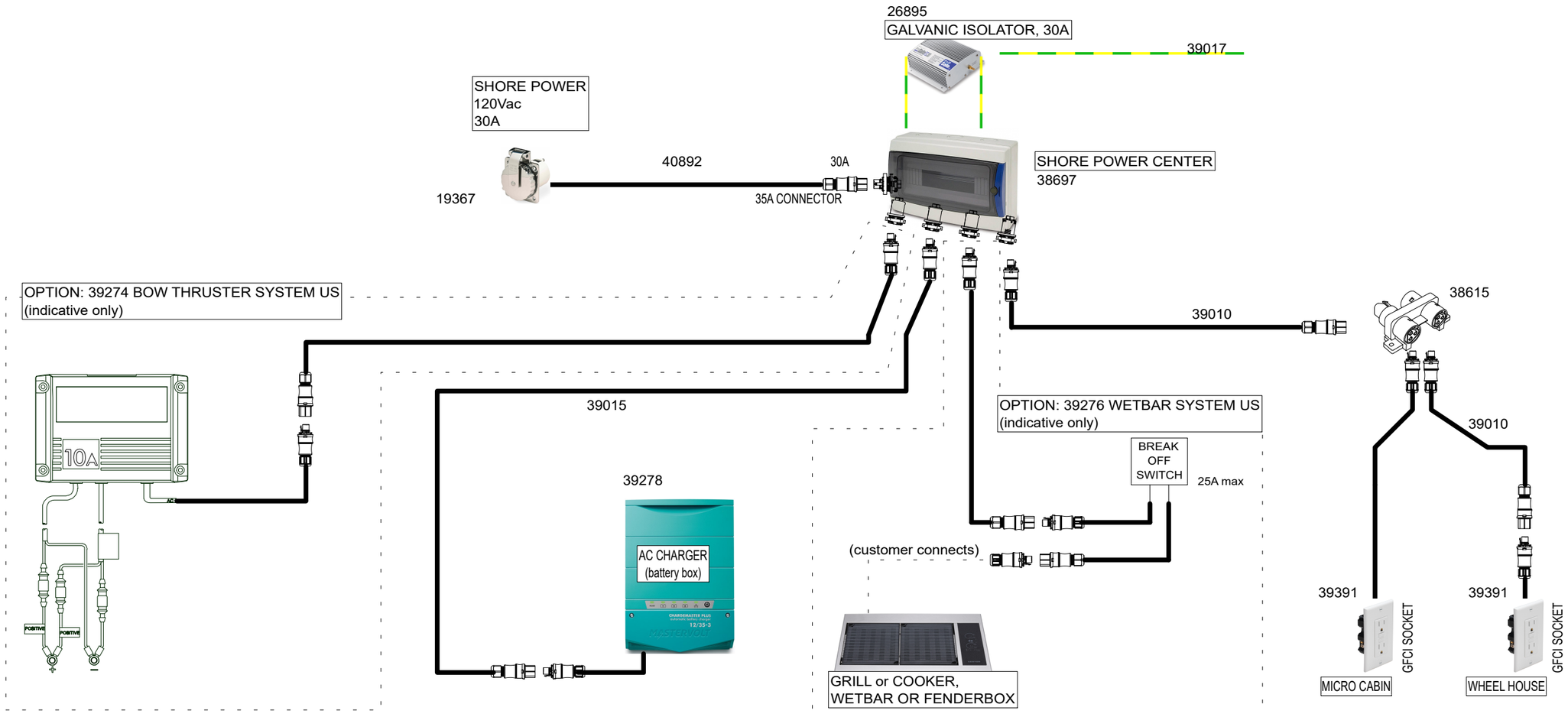

STANDARD COMPONENTS - parts list
19367 - Shore Power Cable 30A/125V 15m Yellow - Marinco 199119
40892 - DECK CONTACT MARINCO US PHOENIX - 70cm AWG 10 WITH TUBE

26895 - Galvanic Isolator 30A, 120/240 VAC - ProSafe FS30
39017 - AC GROUNDING CABLE US - 1000cm AWG 10 WITH TUBE

38697 - Axopar 28 SHORE POWER CENTER US -

39015 - 10m RST CONNECTION CABLE, AWG14 - USA -
39278 ChargeMaster Plus 12/35-3 with RST

2pcs 39010 - 5m RST CONNECTION CABLE, AWG14 - USA -
38615 - Distribution block 1I / 3O, parallel connection - Wieland 96.030.0153.1
2pcs 39391 GFCI RECEP. NEMA 5-15R, White, RST20 - USA A

13.2.2024	PF	B2: 2005055; Replaced 39021->40892, removed 39006	Date	5.5.2023	NAVIX.	Boat	Sub-product code	38695 Product code	Project ID
			Drawing by	PF					
			Sheet rev.	2		Boat model	SHORE POWER SYSTEM US Title	HL Loc	1/ 3 Sheet
Date of modification	Modified by	Description	Project rev.	B	Copyright by				

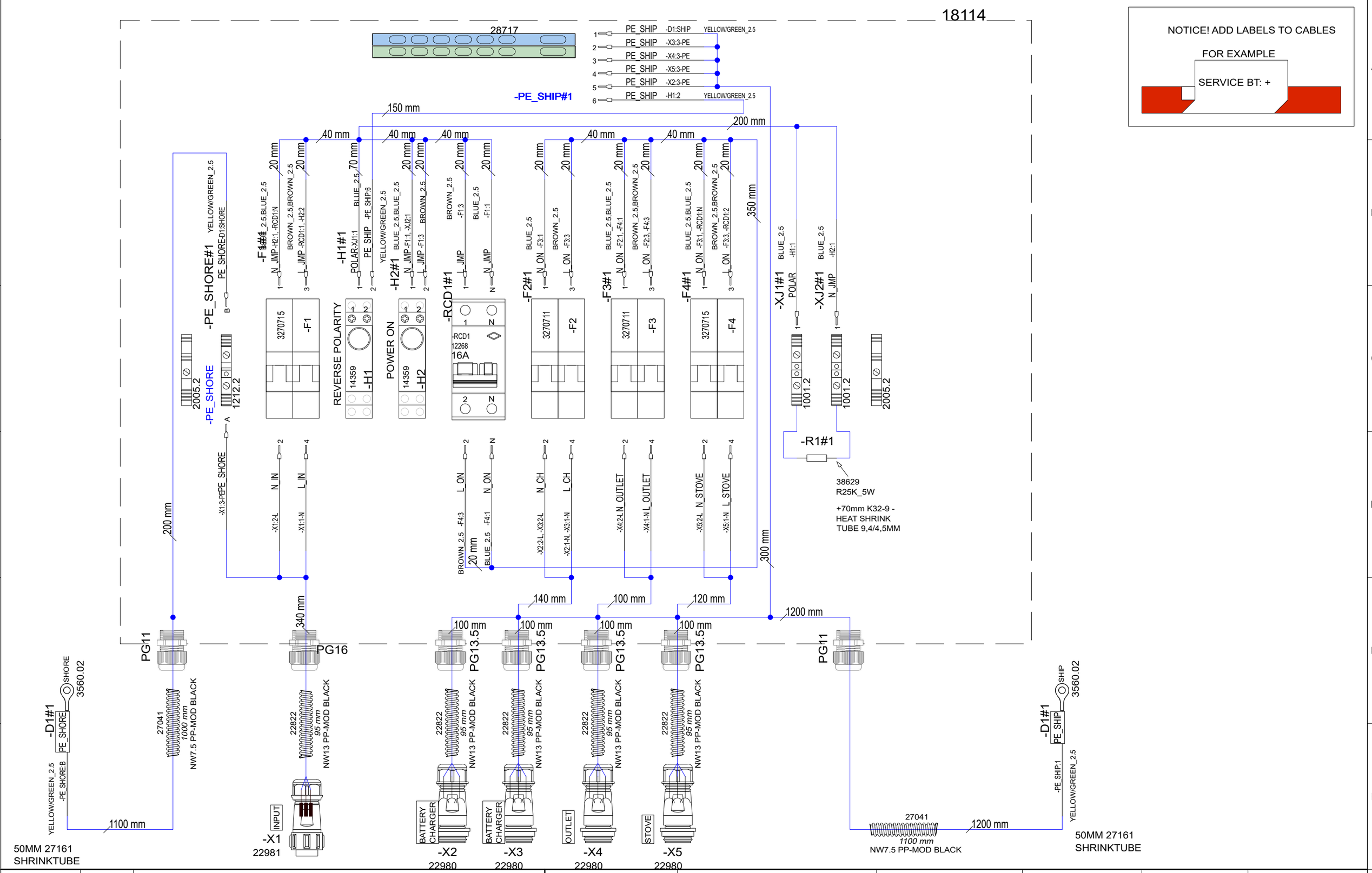

8.12.2023	PF	A2: 2004976; Layout corrected, pe ship moved	Date	11.4.2023	NAVIX.	Axopar Boat		38696 Product code	Project ID
19.2.2024	PF	B3: 2005055; PE length changes	Drawing by	PF		28 Boat model	SHORE POWER CENTER EU Title	HL Loc	2 / 4 Sheet
			Sheet rev.	3					
Date of modification	Modified by	Description	Project rev.	B	Copyright by		Sub-product code		

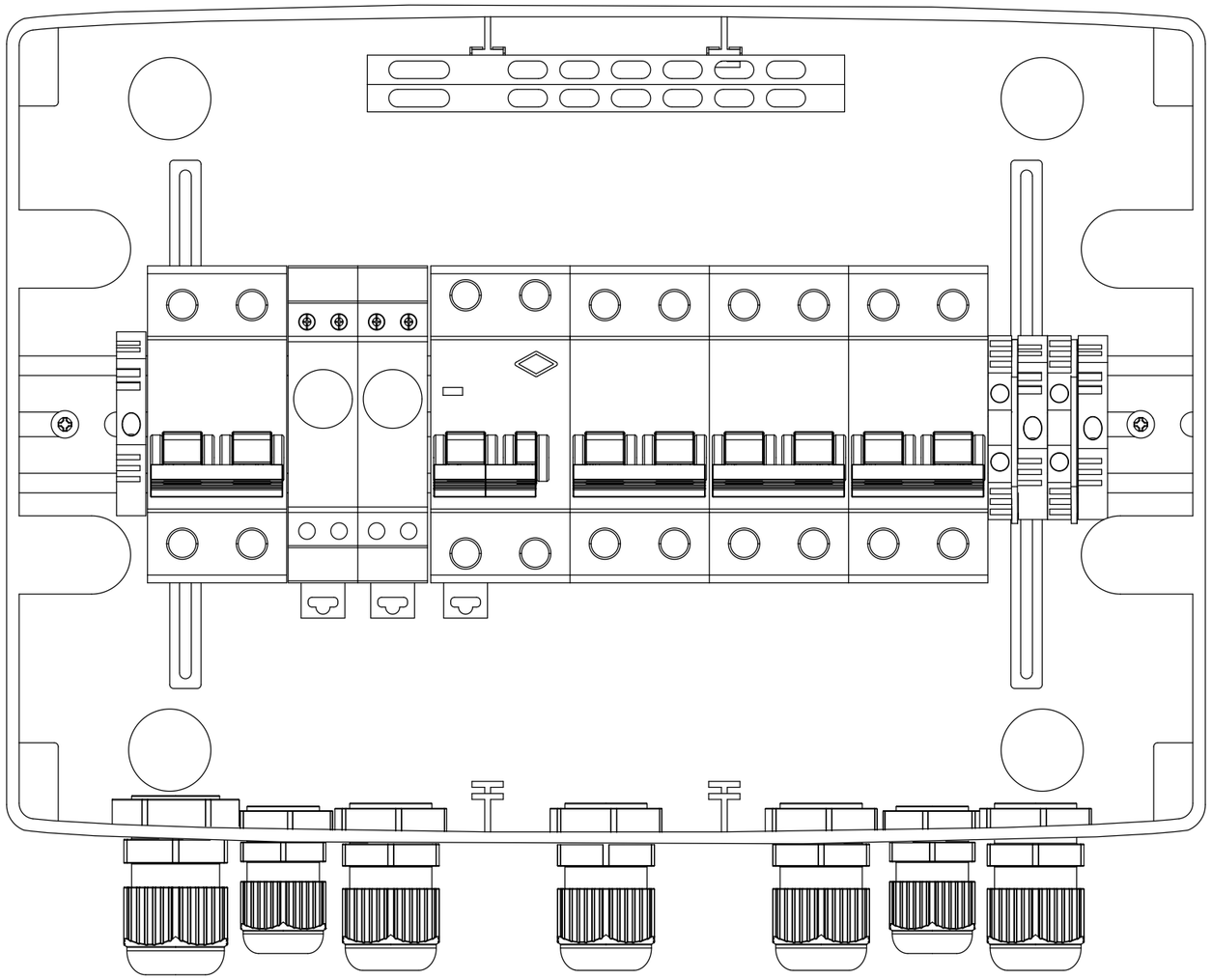

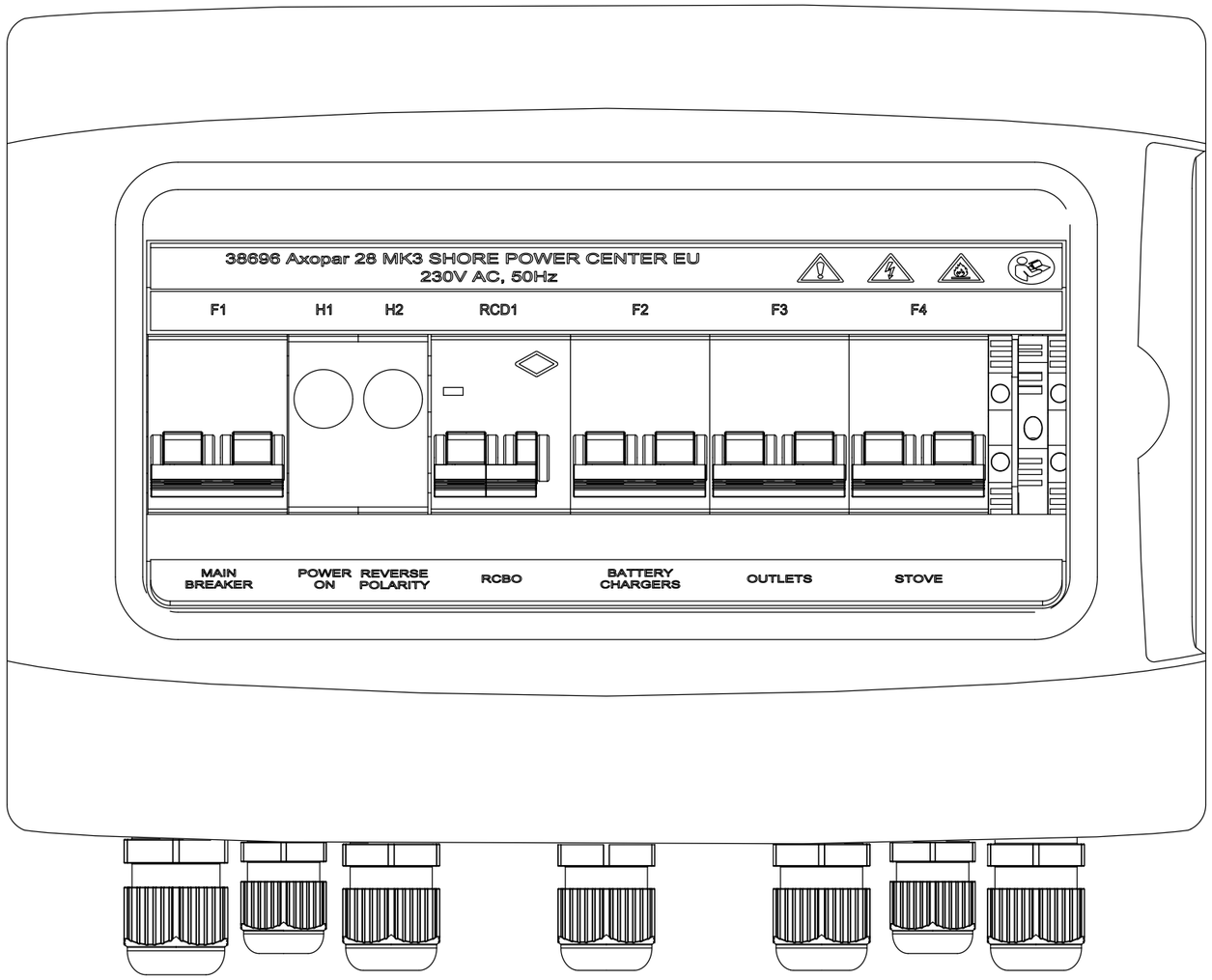

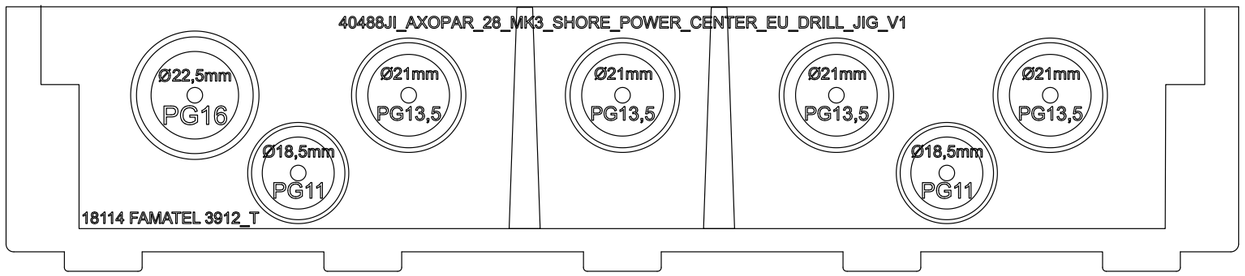

40487_AXOPAR_28_MK3_SHORE_POWER_CENTER_EU_LABEL_SET_V1

Label 1

38696 Axopar 28 MK3 SHORE POWER CENTER EU
230V AC, 50Hz

Label 2

F1 H1 H2 RCD1 F2 F3 F4

Label 3

MAIN BREAKER | POWER ON | REVERSE POLARITY | RCBO | BATTERY CHARGERS | OUTLETS | STOVE

DRILL HOLES WITH 39478JI_V1 AND 40488JI_V1 AS GUIDE

Date of modification	Modified by	Description
8.12.2023	PF	A2: 2004976; Layout corrected, pe ship moved
19.2.2024	PF	B3: 2005055; PE length changes

Date	11.4.2023
Drawing by	PF
Sheet rev.	3
Project rev.	B

Copyright by

Axopar Boat	Sub-product code	38696 Product code	Project ID
28 Boat model	SHORE POWER CENTER EU Title	HL Loc	3 / 4 Sheet

SPC TARKASTUSPÖYTÄKIRJA
SPC INSPECTION SHEET

TUOTE TARRA /
PRODUCT LABEL

* PPKKVV-JÄRJESTYSNUMERO / DDMMYY-RUNNING NUMBER (Esim. 11. maaliskuuta 2013 tehty tuote on sarjanumeroltaan 110313-01, seuraava on 110313-02 jne.)

SARJANUMERO* / SERIAL NUMBER*						
JOHDOT KIINNI OIKEIN / CORRECT CONNECTIONS						
MAADOITUS TULEVAT JA LÄHTEVÄT / GROUND CONNECTION IN AND OUT						
VVS JA TOTSIT I-ASENNOSSA / RCBO AND CIRCUIT BREAKERS IN I-POSITION						
ERISTYSVASTUS (mA) max lukema ** / ISOLATION RESISTOR (mA) max **						
MAAPIIRI 10A (Ohm) max lukema ** / GROUND CIRCUIT 10A (Ohm) max **						
TOIMINNALLINEN JA VVS TESTAUS / FUNCTIONAL AND RCBO TEST						
SARJANUMERO TARRA / SERIAL NUMBER STICKER						
PVM / DATE						
TESTASI / TESTED BY						

Tehty CENELEC EN 50106 mukaan / Made according to CENELEC EN 50106

**ERISTYSVASTUS JA MAAPIIRI TESTATTAVA JOKAISEEN SISÄÄNTULOON JA ULOSMENOON / ISOLATION RESISTOR AND GROUND CIRCUIT SHOULD BE TESTED FOR EVERY IN AND OUT

RAJA-ARVOT / LIMITS:

ERISTYSVASTUS / ISOLATING RESISTOR 1000V = <20mA

MAAPIIRI / GROUND CIRCUIT 10A = <0,2 Ohm

Date of modification	Modified by	Description
8.12.2023	PF	A2: 2004976; Layout corrected, pe ship moved
19.2.2024	PF	B3: 2005055; PE length changes

Date	27.4.2023
Drawing by	PF
Sheet rev.	3
Project rev.	B

Copyright by

Axopar Boat	Sub-product code	38696 Product code	Project ID
28 Boat model	SHORE POWER CENTER EU Title	HL Loc	4 / 4 Sheet

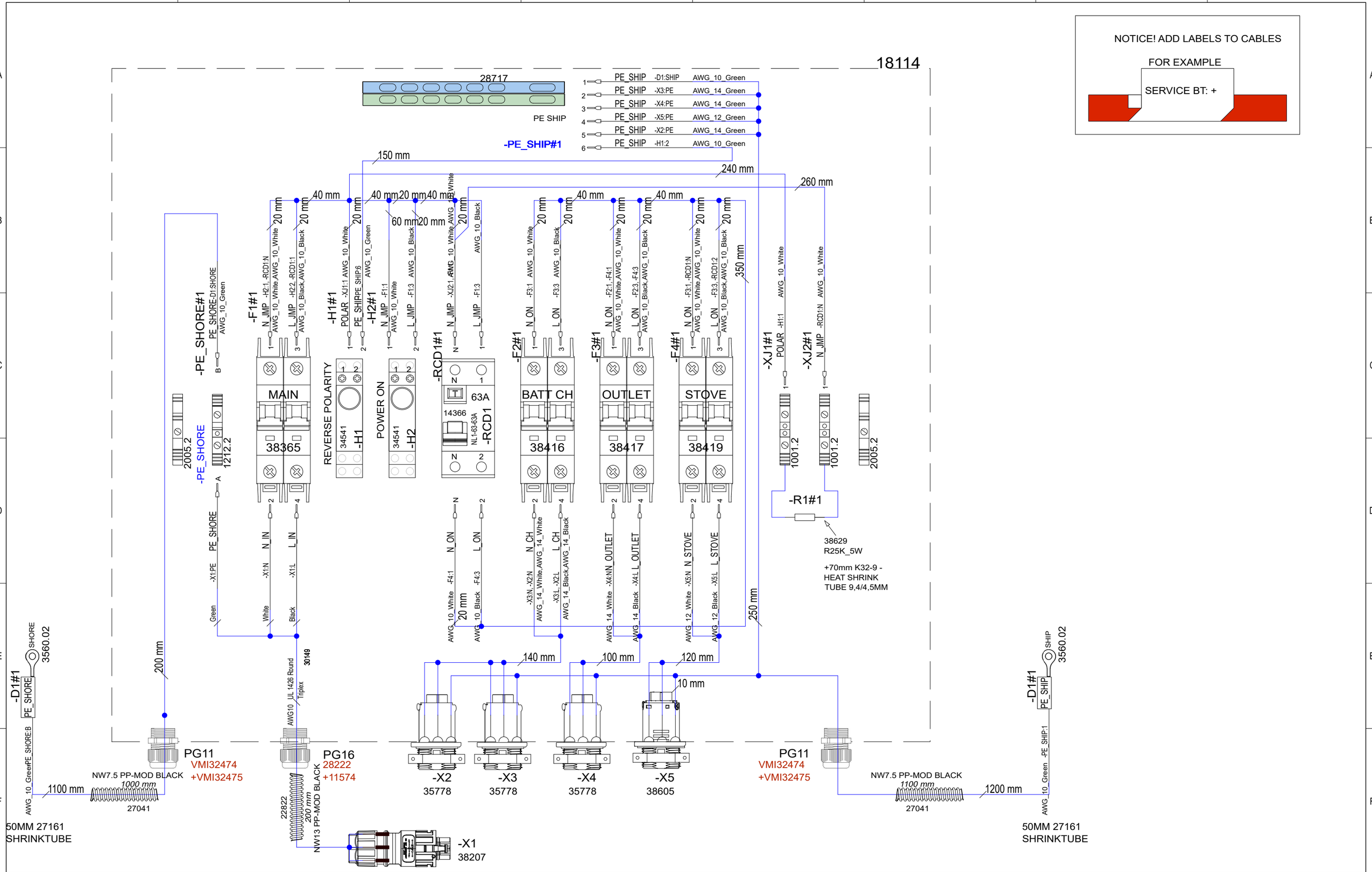

8.12.2023	PF	A2: 2004976; Layout corrected, X1 -> flange model, pe ship moved	Date 11.4.2023	NAVIX.	Axopar		
19.2.2024	PF	B3: 2005055; PE length changes	Drawing by PF		Boat	Sub-product code	38697 Product code	Project ID
15.4.2024	PF	B4 2005137; X1 connector type, RCD1 38366->14366	Sheet rev. 4		28	SHORE POWER CENTER US	HL	2 / 4
Date of modification	Modified by	Description	Project rev. B	Copyright by	Boat model	Title	Loc	Sheet

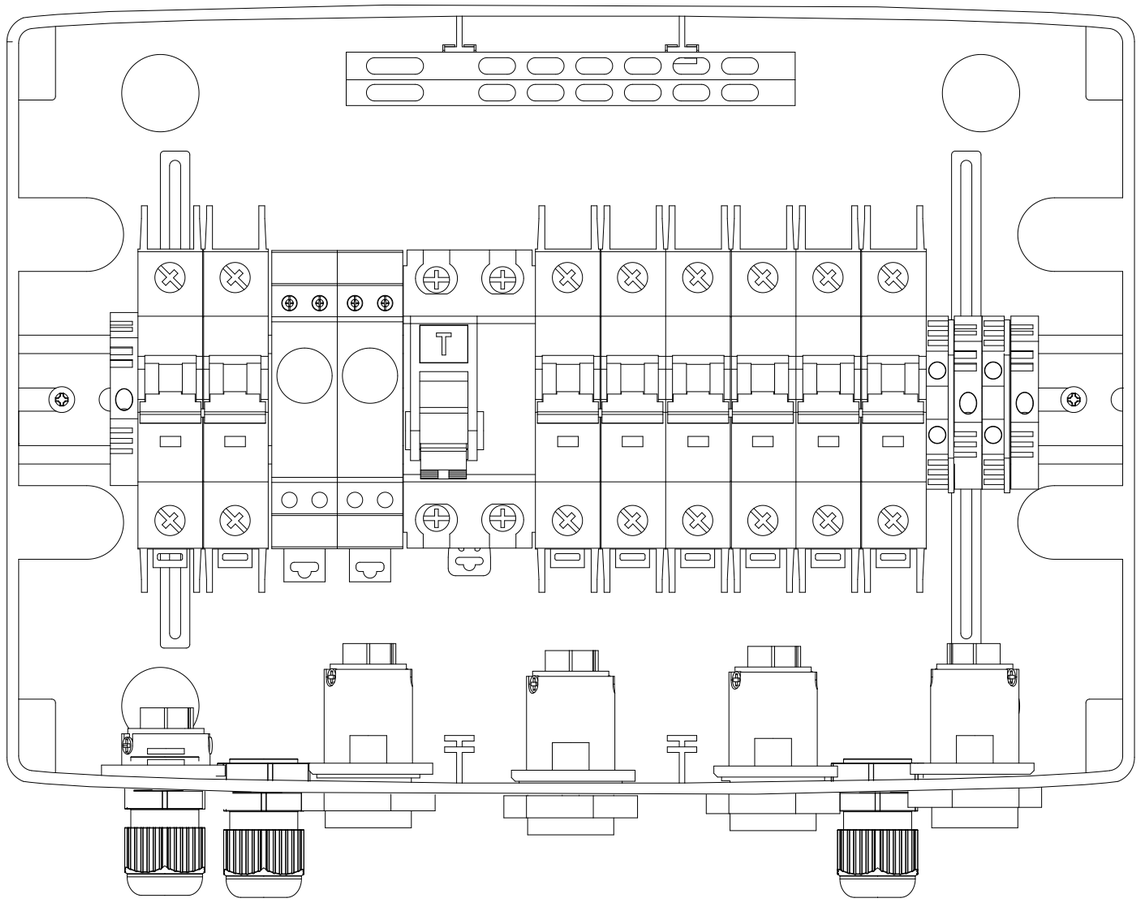

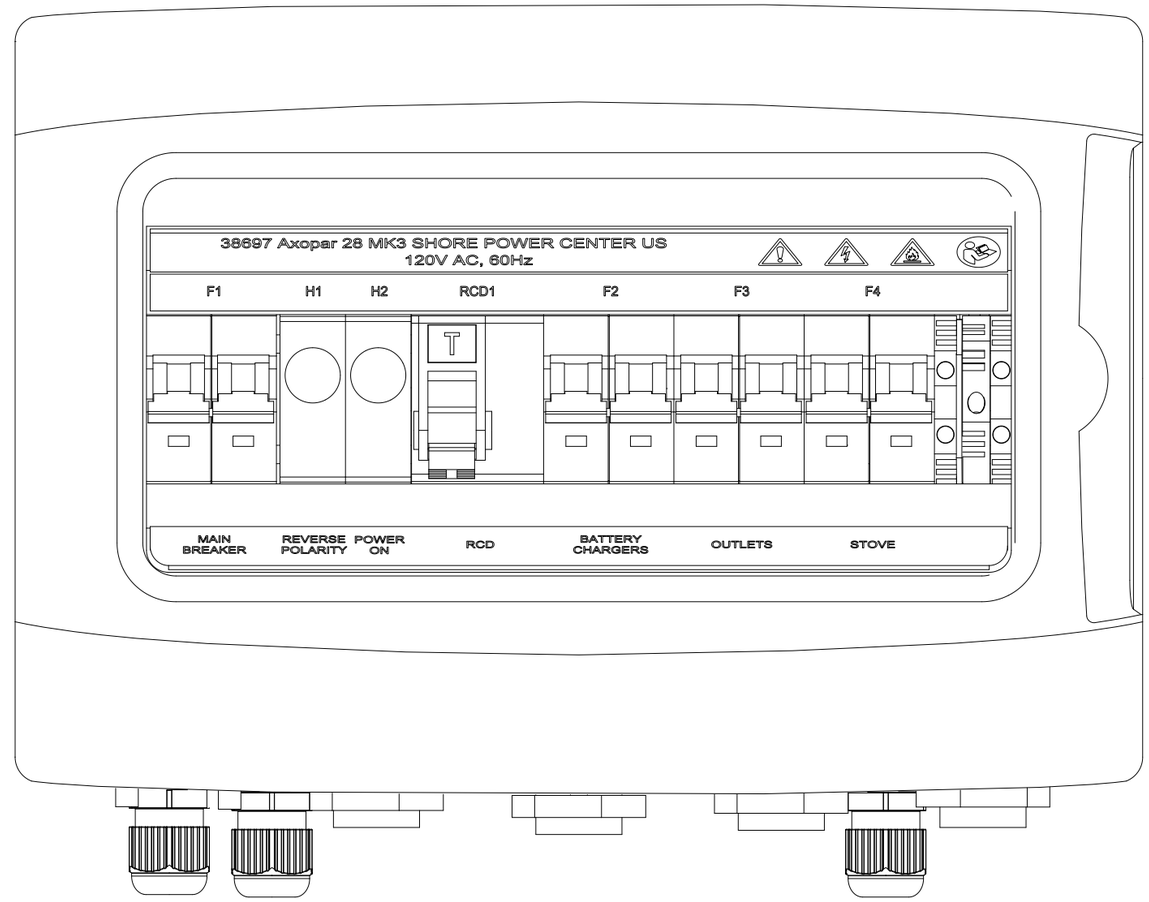

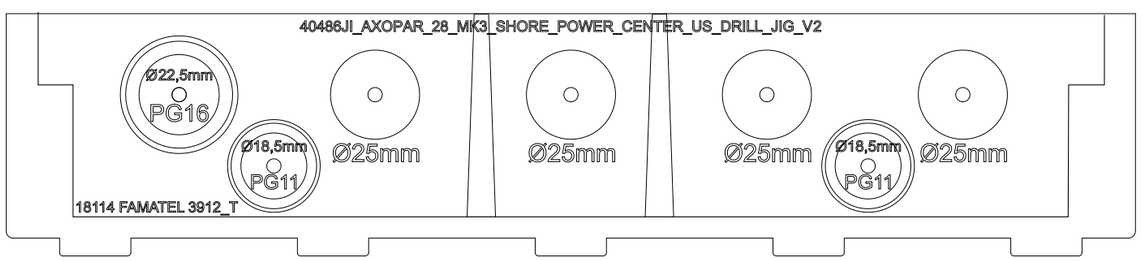

DRILL HOLES WITH 39478JI_V1 AND 40486JI_V2 AS GUIDE

40485_AXOPAR_28_MK3_SHORE_POWER_CENTER_US_LABEL_SET_V1

Label 1

38697 Axopar 28 MK3 SHORE POWER CENTER US
120V AC, 60Hz

Label 2

F1 H1 H2 RCD1 F2 F3 F4

Label 3

MAIN BREAKER | REVERSE POLARITY | POWER ON | RCD | BATTERY CHARGERS | OUTLETS | STOVE

8.12.2023	PF	A2: 2004976; Layout corrected, X1 -> flange model, pe ship moved	Date	11.4.2023	NAVIX.	Axopar			
19.2.2024	PF	B3: 2005055; PE length changes	Drawing by	PF		Boat	Sub-product code	38697 Product code	Project ID
15.4.2024	PF	B4 2005137; X1 connector type, RCD1 38366->14366	Sheet rev.	4		28	SHORE POWER CENTER US	HL	3 / 4
Date of modification	Modified by	Description	Project rev.	B	Copyright by	Boat model	Title	Loc	Sheet

USA SPC INSPECTION SHEET

PRODUCT LABEL

* DDMMYY-RUNNING NUMBER (For example. 11th March 2019 made product has serial number 110319-01, next is 110319-02 etc.)

	SERIAL NUMBER*						
VISUAL/ MANUAL	1. PERFORM FULL SYSTEM TEST -LABEL IN PLACE						
	2. CORRECT COMPONENTS AND CONNECTIONS						
	3. GROUND CONNECTION IN AND OUT						
	4. RCBO AND CIRCUIT BREAKERS IN I-POSITION						
TESTER	5. ISOLATION RESISTANCE (mA) max **						
	6. GROUND CIRCUIT 10A (Ohm) max **						
	7. RCD TEST, (ms @30mA) max						
	8. POLARITY TEST, PASS or FAIL **						
115Vac VOLTAGE LIVE	9. FUNCTIONAL AND RCD*** TEST, PASS or FAIL						
	SERIAL NUMBER STICKER						
	DATE						
	TESTED BY						

Made according to CENELEC EN 50106:2008 WITH ADDITION OF (8) POLARITY TEST AND (9) 115Vac FUNCTIONAL AND RCD TEST

** (5) ISOLATION RESISTANCE, (6) GROUND CIRCUIT AND (8) POLARITY TEST SHOULD BE TESTED FOR EVERY IN AND OUT

*** (9) RDC TEST-BUTTON OPERATION VERIFICATION

LIMITS:

ISOLATING RESISTOR 1000V = <5mA

GROUND CIRCUIT 10A = <0,2 Ohm

RDC TEST, Time <100mS @30mA

REVISION B

Date of modification	Modified by	Description
8.12.2023	PF	A2: 2004976; Layout corrected, X1 -> flange model, pe ship moved
19.2.2024	PF	B3: 2005055; PE length changes
15.4.2024	PF	B4 2005137; X1 connector type, RCD1 38366->14366

Date	27.4.2023
Drawing by	PF
Sheet rev.	4
Project rev.	B

Copyright by

Axopar		38697	
Boat	Sub-product code	Product code	Project ID
28	SHORE POWER CENTER US	HL	4 / 4
Boat model	Title	Loc	Sheet

Axopar 28 Mk3 230Vac BOW THRUSTER SYSTEM LAYOUT

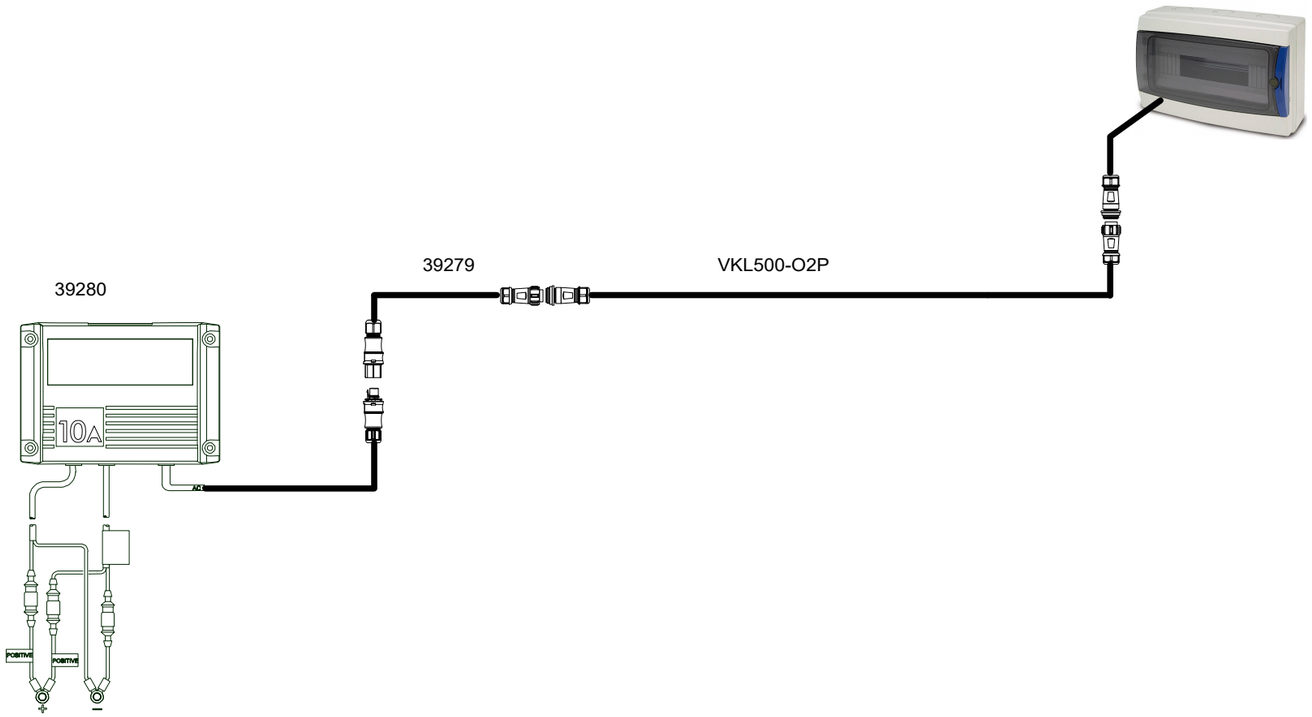

OPTION: BOW THRUSTER - parts list
VKL500-O2P - CONNECTION CABLE 500CM IP68 1,5 mm2 WITH TUBE -
39279 O2 male - RST female adapter
39280 EasyCharge 10A with RST

13.2.2024	PF	B2: Lenght extended to 5m	Date	1.6.2023	NAVIX.	Axopar Boat	Sub-product code	39273 Product code	Project ID
			Drawing by	PF		28 MK3 Boat model	BOW THRUSTER SYSTEM EU Title	HL Loc	2 / 4 Sheet
			Sheet rev.	2					
Date of modification	Modified by	Description	Project rev.	B	Copyright by				

Axopar 28 Mk3 120Vac BOW THRUSTER SYSTEM LAYOUT

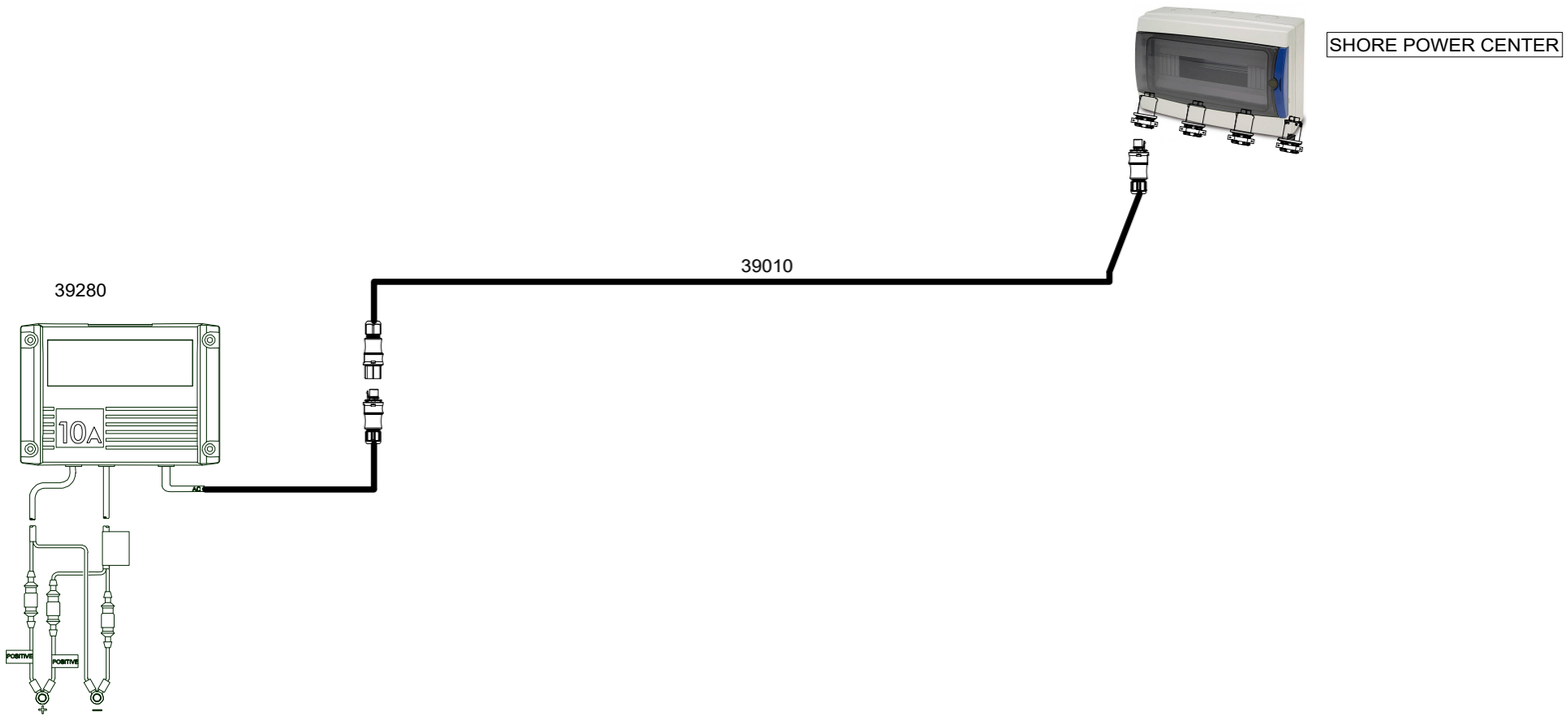

OPTION: BOW THRUSTER - parts list
39010 - 5m RST CONNECTION CABLE, AWG14 - USA -
39280 EasyCharge 10A with RST

13.2.2024	PF	B2: 2005055; Replaced 39007->39010	Date	31.5.2023	NAVIX.	Boat	Sub-product code	39274 Product code	Project ID
			Drawing by	PF					
			Sheet rev.	2		Boat model	BOW THRUSTER SYSTEM US Title	HL Loc	2 / 3 Sheet
Date of modification	Modified by	Description	Project rev.	B	Copyright by				

NOTATION

Reference Designators
A Separable assembly or sub-assembly
BT Battery
C Capacitor
D Diode (all types, including LED), diode isolator
DS Display, general light source, lamp, signal light
F Fuse
G Generator or oscillator
H Lamps (Hardware e.g., conduits)
K Relay or contactor
L Inductor or coil or ferrite bead
LS Loudspeaker, buzzer, horn
M Motor
Q Transistor, FET isolator
R Resistor
S Switch (all types, including buttons)
T Transformer
X Connector
XJ Junction, Busbar

HOW TO INTERPRET
REFERENCE DESIGNATORS
E.G.

DEVICES

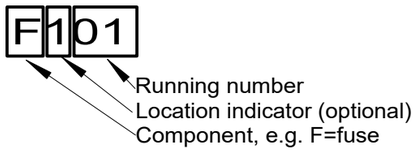

LP = optional lighting pack

HARNESS LAYOUT

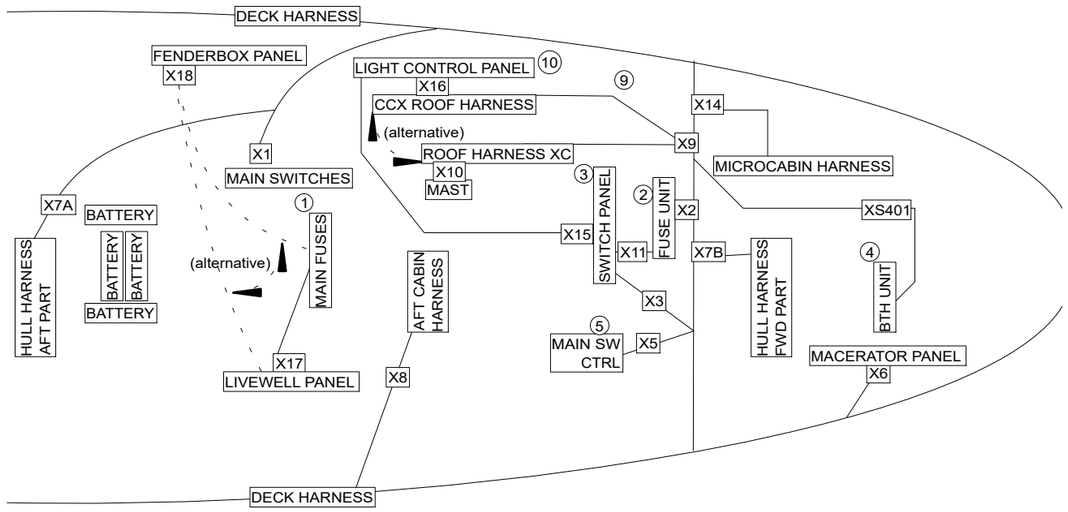

Navix disclaims all liability for any issues that may arise from the use of devices not specified in this documentation. The electrical system design is based exclusively on the devices listed herein, or on the estimated maximum power (or currents) for each circuit when the specific device model was unknown at the time of engineering. Any substitution of devices or the use of devices with higher power (or current) than specified herein voids all warranties and releases Navix from any responsibility for system performance or safety.

Date of modification	Modified by	Description
23.4.2024	PF	C5: 2005089; Not modified
8.8.2024	PF	C6: 2005089; Harness layout updated
1.10.2024	PF	C7: 2005259; Not modified

Date	20.3.2023
Drawing by	PF
Sheet rev.	7
Project rev.	C

NAVIX
Copyright by

Axopar Boat	Sub-product code	DIAGRAM Product code	2004468 Project ID
28 MK3 Boat model	NOTATION LAYOUT Title	HL Loc	1/ 106 Sheet

This page varies according to engine setup and main switch type.

2 ENGINE, REMOTE MAIN SWITCHES

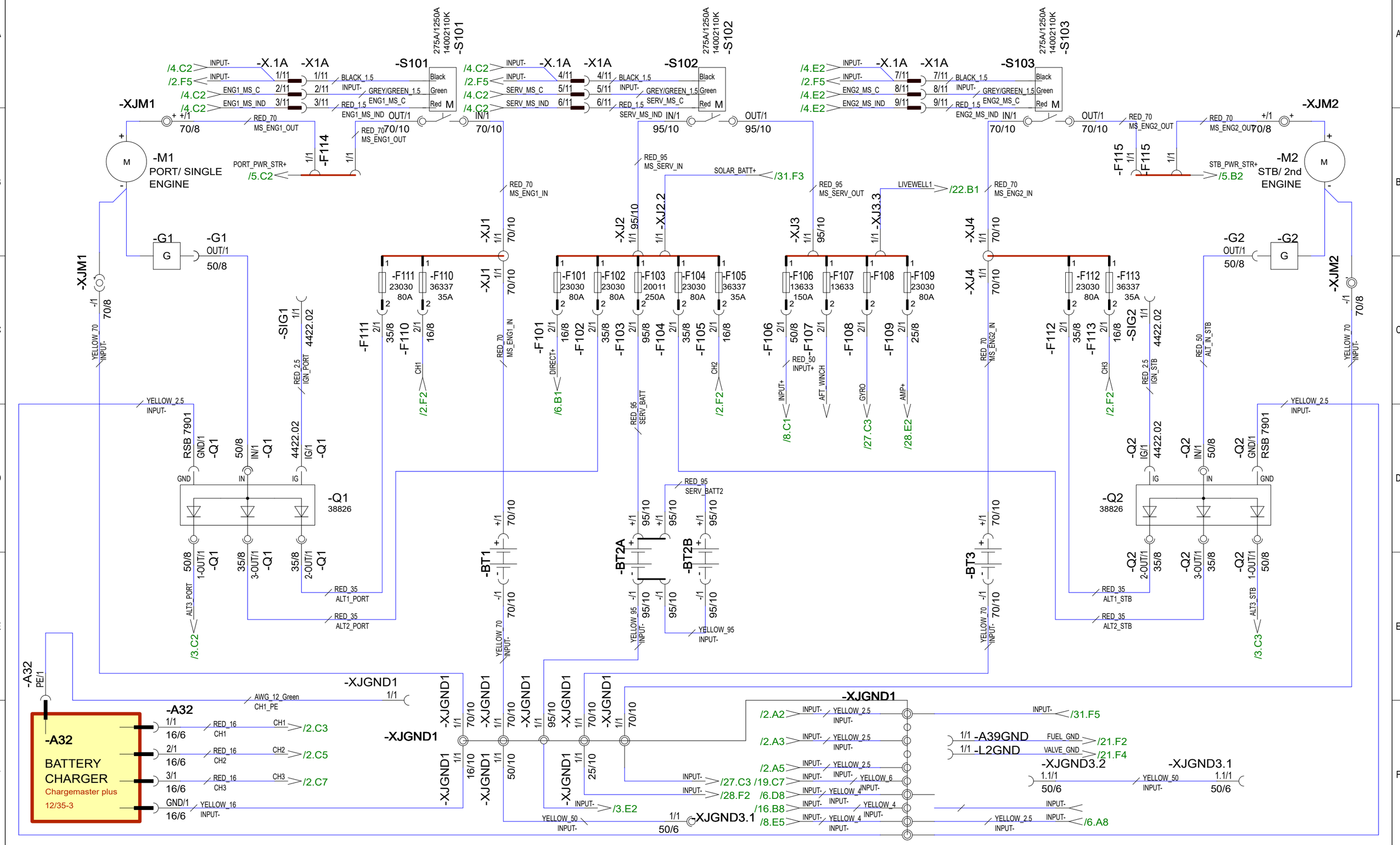

23.4.2024	PF	C5: 2005089; Not modified	Date	20.3.2023	NAVIX	Axopar		DIAGRAM	2004468
8.8.2024	PF	C6: 2005089; Not modified	Drawing by	PF		Boat	Sub-product code	Product code	Project ID
1.10.2024	PF	C7: 2005259; Added PE wire for A32 (optional route)	Sheet rev.	7		28 MK3	MAIN	HL	2 / 106
Date of modification	Modified by	Description	Project rev.	C	Copyright by	Boat model	Title	Loc	Sheet

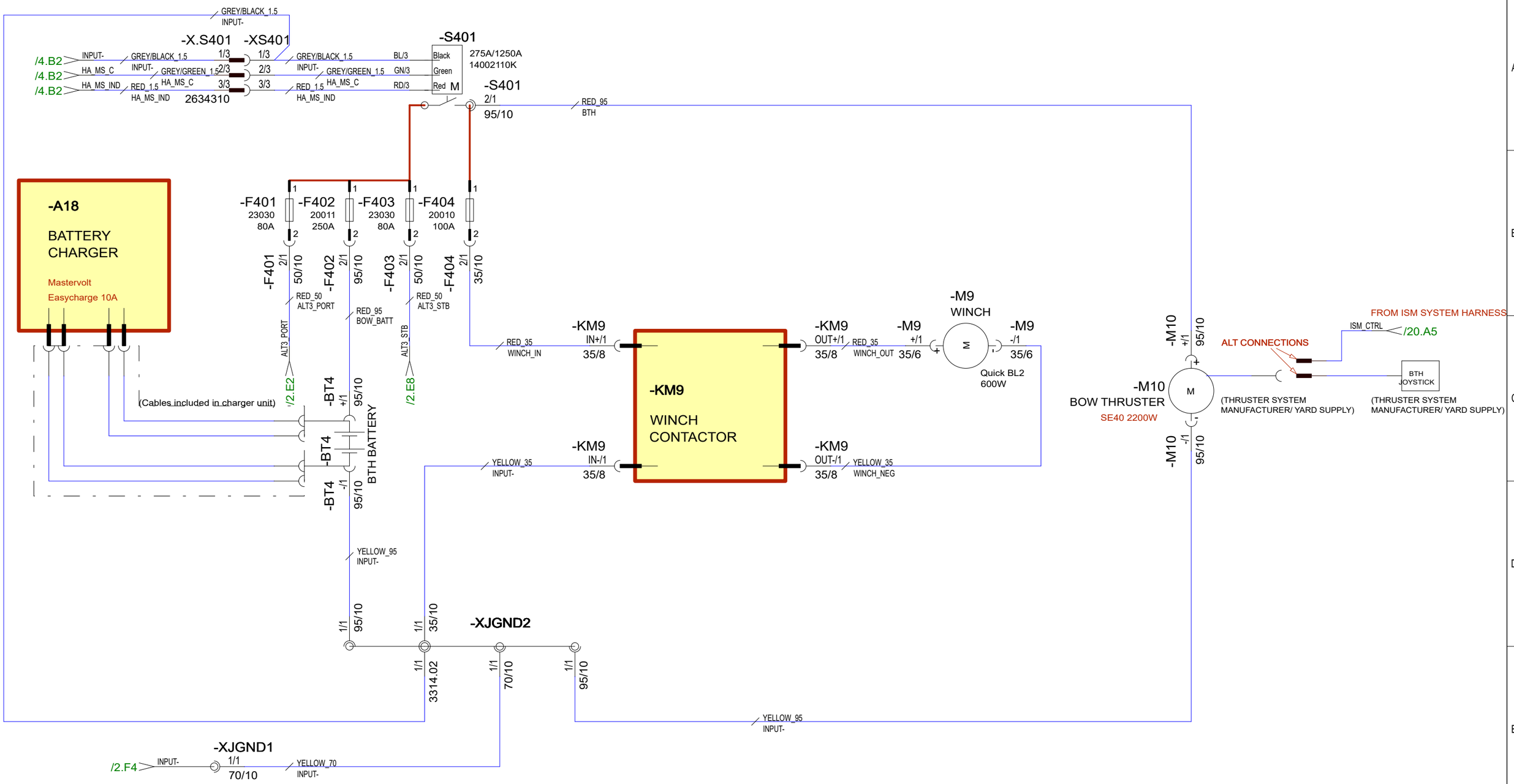

23.4.2024	PF	C5: 2005089; Not modified	Date	20.3.2023	NAVIX	Axopar		DIAGRAM	2004468
8.8.2024	PF	C6: 2005089; Not modified	Drawing by	PF		Boat	Sub-product code	Product code	Project ID
1.10.2024	PF	C7: 2005259; Not modified	Sheet rev.	7		28 MK3	HEAVY AUX	HL	3 / 106
Date of modification	Modified by	Description	Project rev.	C	Copyright by	Boat model	Title	Loc	Sheet

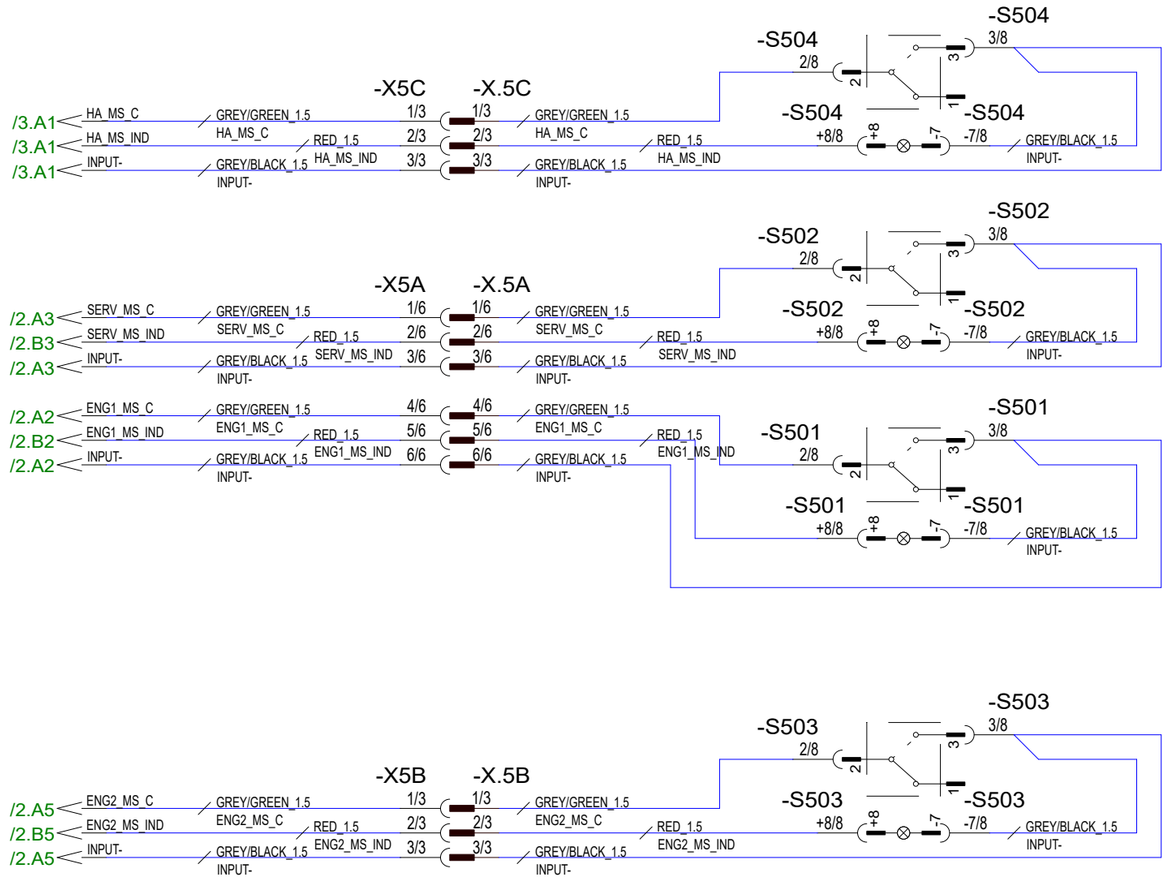

23.4.2024	PF	C5: 2005089; Not modified	Date	20.3.2023	NAVIX	Axopar		DIAGRAM	2004468
8.8.2024	PF	C6: 2005089; Not modified	Drawing by	PF		Boat	Sub-product code	Product code	Project ID
1.10.2024	PF	C7: 2005259; Not modified	Sheet rev.	7		28 MK3	REMOTE MAIN SWITCHES	HL	4 / 106
Date of modification	Modified by	Description	Project rev.	C	Copyright by	Boat model	Title	Loc	Sheet

*1 1-engine installation

*2 2-engine installation with APS

*1 & *3 2-engine installation with JPO

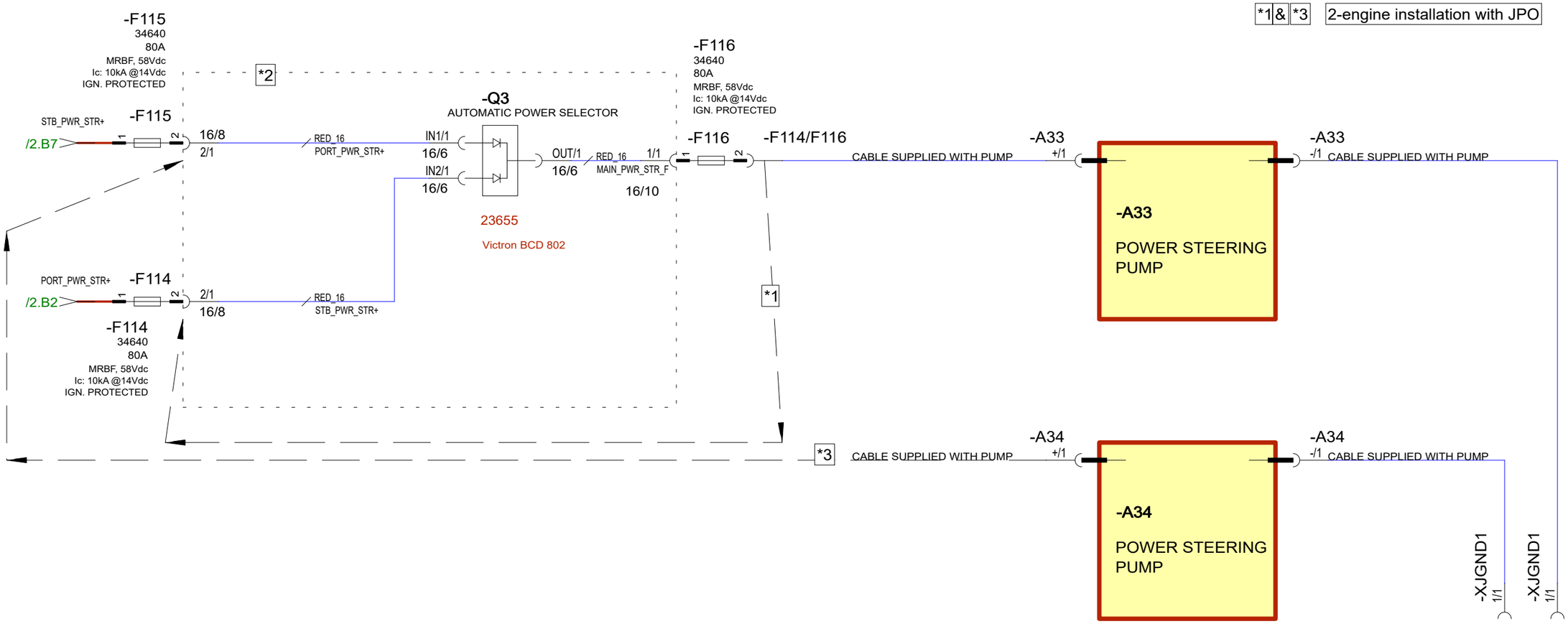

23.4.2024	PF	C5: 2005089; Not modified	Date 24.3.2023	NAVIX	Axopar		DIAGRAM	2004468
8.8.2024	PF	C6: 2005089; Not modified	Drawing by PF		Boat	Sub-product code	Product code	Project ID
1.10.2024	PF	C7: 2005259; Not modified	Sheet rev. 7		28 MK3	POWER STEER APS, JPO	HL	5 / 106
Date of modification	Modified by	Description	Project rev. C	Copyright by	Boat model	Title	Loc	Sheet

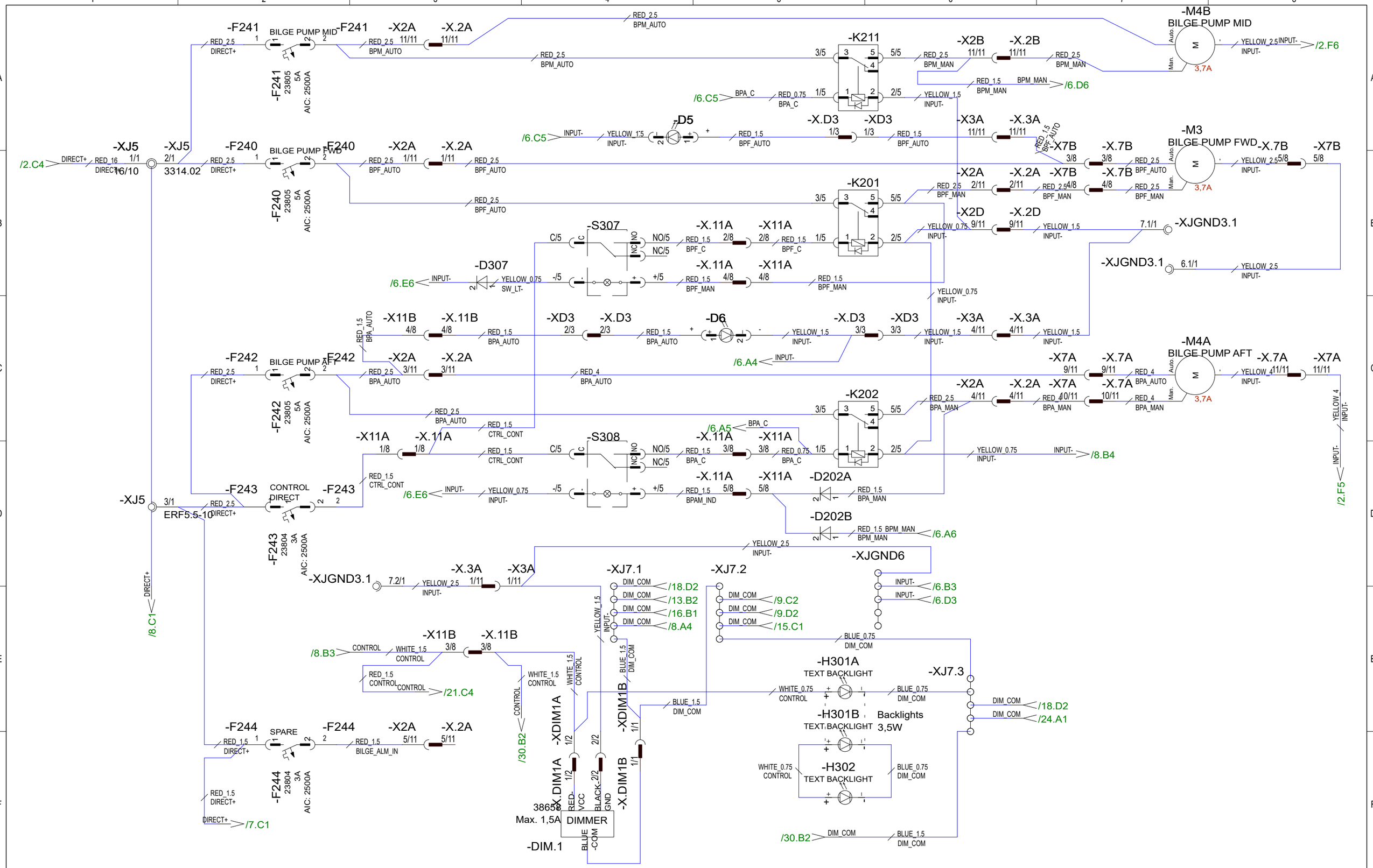

23.4.2024	PF	C5: 2005089; Dimmer wiring, Relay type, added BP M4B, text backlts	Date 20.3.2023	NAVIX	Axopar		DIAGRAM 2004468
8.8.2024	PF	C6: 2005089; Not modified	Drawing by PF		Boat	Sub-product code	Product code / Project ID
1.10.2024	PF	C7: 2005259; Not modified	Sheet rev. 7		28 MK3	BILGE PUMPS, SWITCH PANEL DIMMING	HL
Date of modification	Modified by	Description	Project rev. C	Copyright by	Boat model	Title	Loc / Sheet 6 / 106

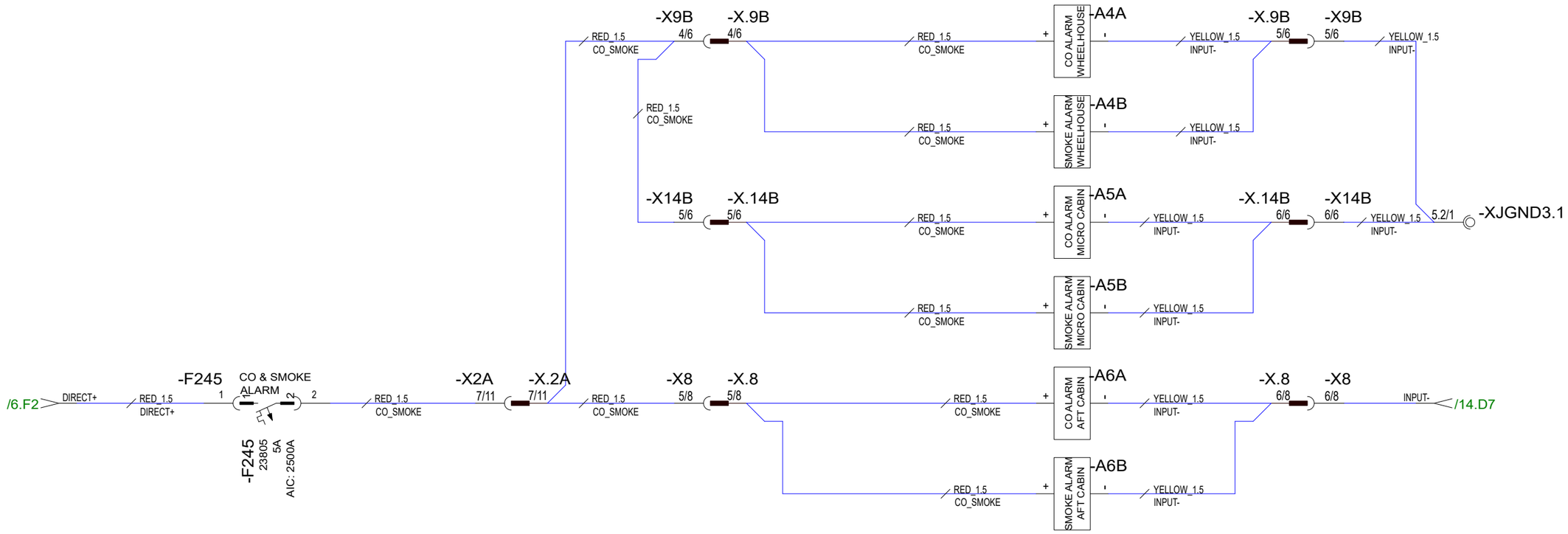

23.4.2024	PF	C5: 2005089; A6B wiring	Date 20.3.2023	NAVIX	Axopar		DIAGRAM	2004468
8.8.2024	PF	C6: 2005089; Not modified	Drawing by PF		Boat	Sub-product code	Product code	Project ID
1.10.2024	PF	C7: 2005259; Not modified	Sheet rev. 7		28 MK3	FIRE & CO ALARMS	HL	7 / 106
Date of modification	Modified by	Description	Project rev. C	Copyright by	Boat model	Title	Loc	Sheet

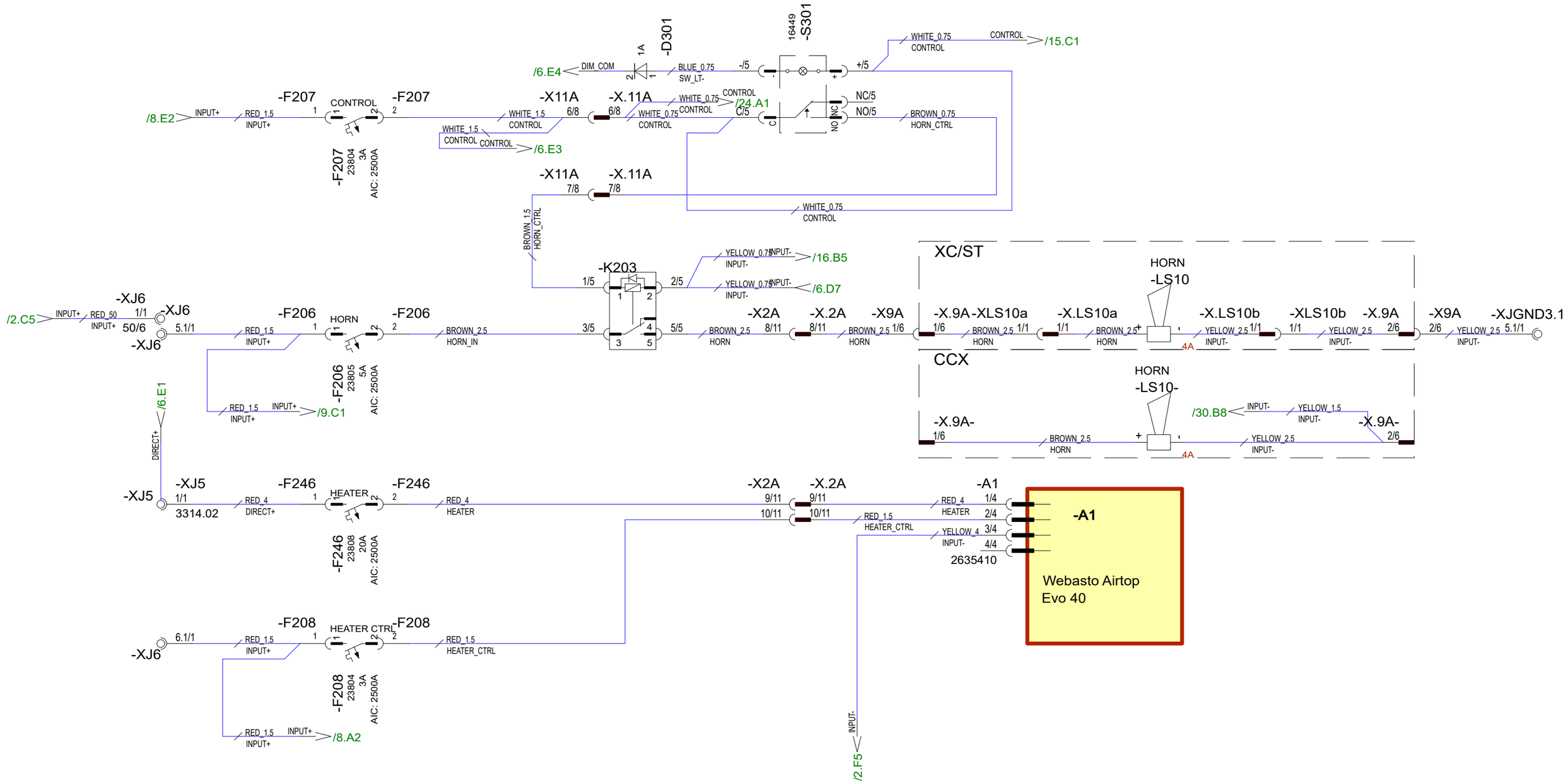

23.4.2024	PF	C5: 2005089; Relay type	Date	20.3.2023	NAVIX	Axopar		DIAGRAM	2004468
8.8.2024	PF	C6: 2005089; Horn: mast -> roof (removed from X10A)	Drawing by	PF		Boat	Sub-product code	Product code	Project ID
1.10.2024	PF	C7: 2005259; Not modified	Sheet rev.	7		28 MK3	HEATER, HORN	HL	8 / 106
Date of modification	Modified by	Description	Project rev.	C	Copyright by	Boat model	Title	Loc	Sheet

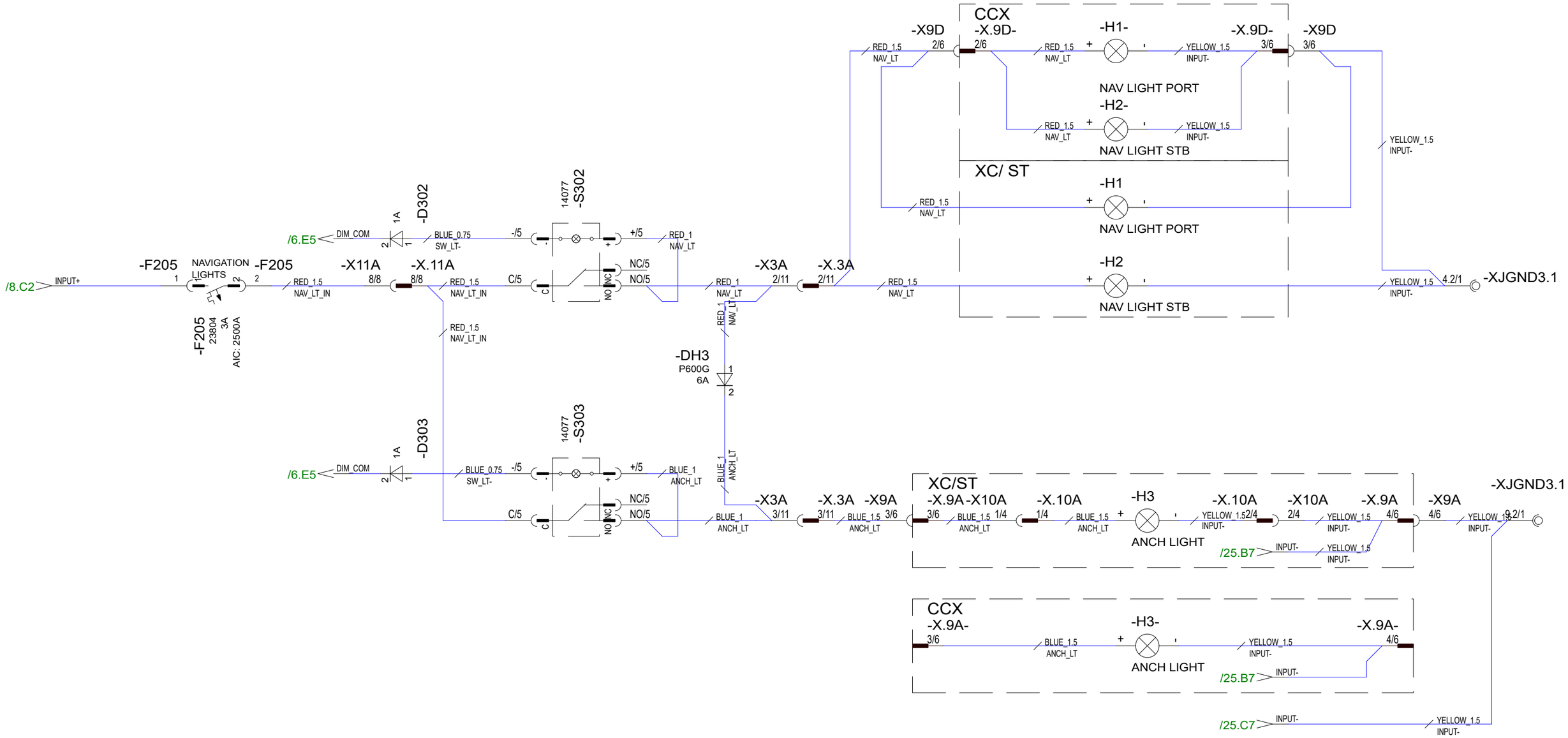

23.4.2024	PF	C5: 2005089; Nav lt wiring changed (added branch to CCX roof)	Date	20.3.2023	NAVIX	Axopar		DIAGRAM	2004468
8.8.2024	PF	C6: 2005089; Not modified	Drawing by	PF		Boat	Sub-product code	Product code	Project ID
1.10.2024	PF	C7: 2005259; Not modified	Sheet rev.	7		28 MK3	NAV LIGHTS	HL	9 / 106
Date of modification	Modified by	Description	Project rev.	C	Copyright by	Boat model	Title	Loc	Sheet

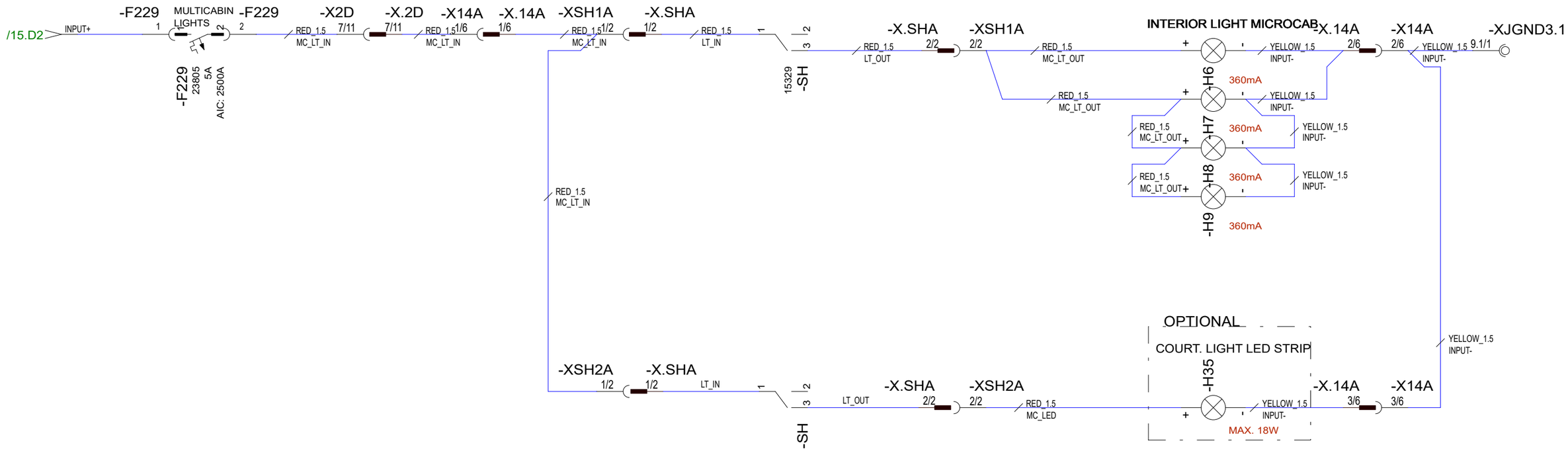

23.4.2024	PF	C5: 2005089; H35 minus	Date	20.3.2023	NAVIX	Axopar		DIAGRAM	2004468
8.8.2024	PF	C6: 2005089; F229 function updated to "Multicabin lights"	Drawing by	PF		Boat	Sub-product code	Product code	Project ID
1.10.2024	PF	C7: 2005259; Not modified	Sheet rev.	7		28 MK3	LIGHTS MICROCABIN	HL	10 / 106
Date of modification	Modified by	Description	Project rev.	C	Copyright by	Boat model	Title	Loc	Sheet

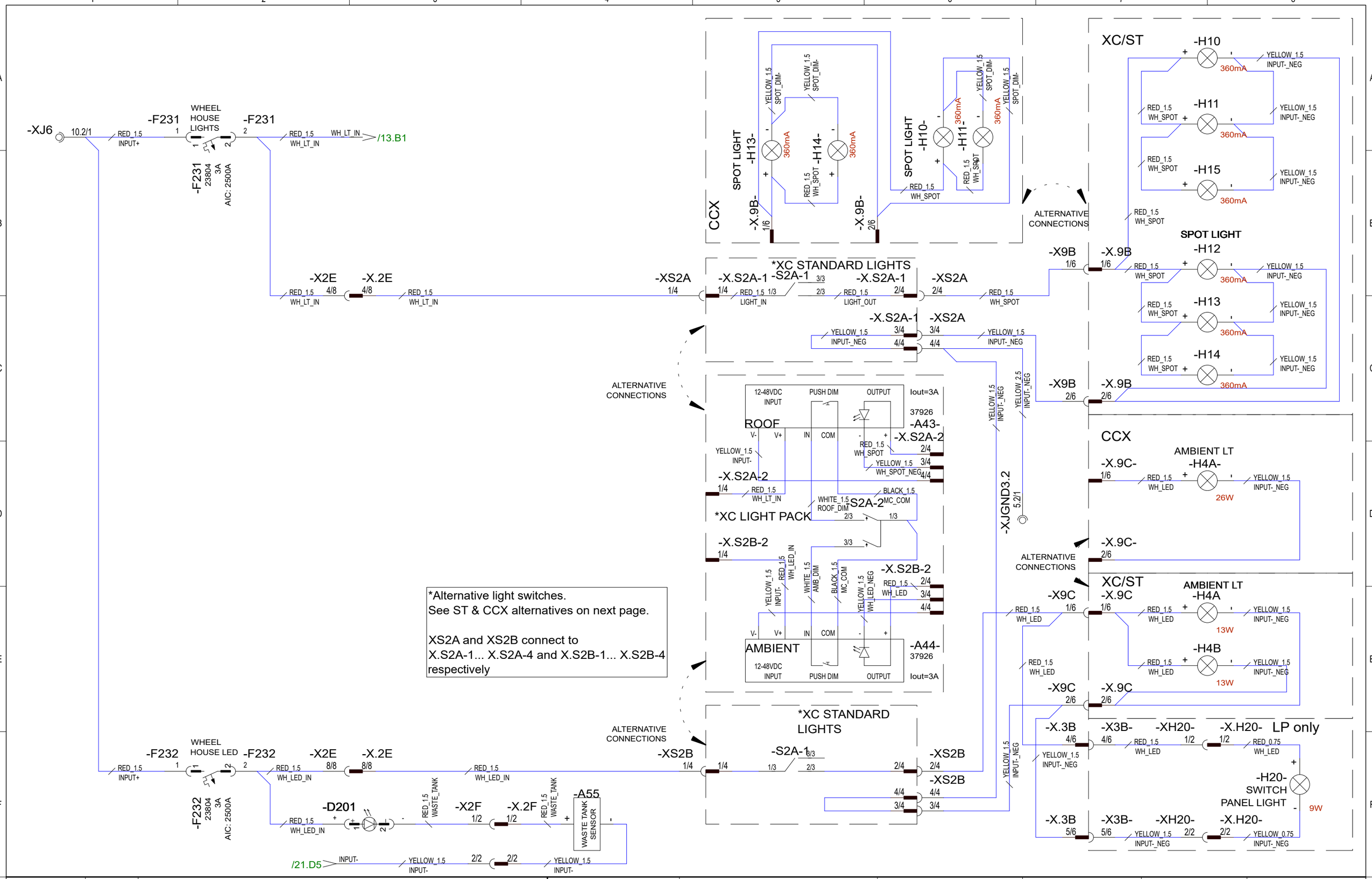

23.4.2024	PF	C5: 2005089; Option structure for MC lights built	Date	20.3.2023	NAVIX	Axopar		DIAGRAM	2004468
8.8.2024	PF	C6: 2005089; Not modified	Drawing by	PF		Boat	Sub-product code	Product code	Project ID
1.10.2024	PF	C7: 2005259; H10&H11->int lts, H4C&H4D->red lts	Sheet rev.	7		28 MK3	LIGHTS MAIN CABIN XC	HL	11/ 106
Date of modification	Modified by	Description	Project rev.	C	Copyright by	Boat model	Title	Loc	Sheet

*Alternative light switches.
See XC alternatives on previous page.

XS2A and XS2B connect to
X.S2A-1... X.S2A-4 and X.S2B-1... X.S2B-4
respectively

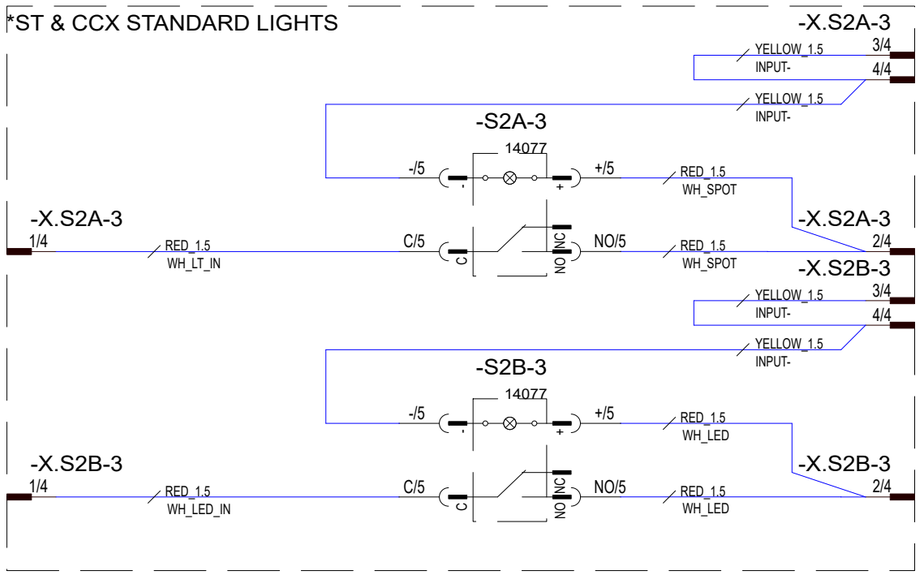

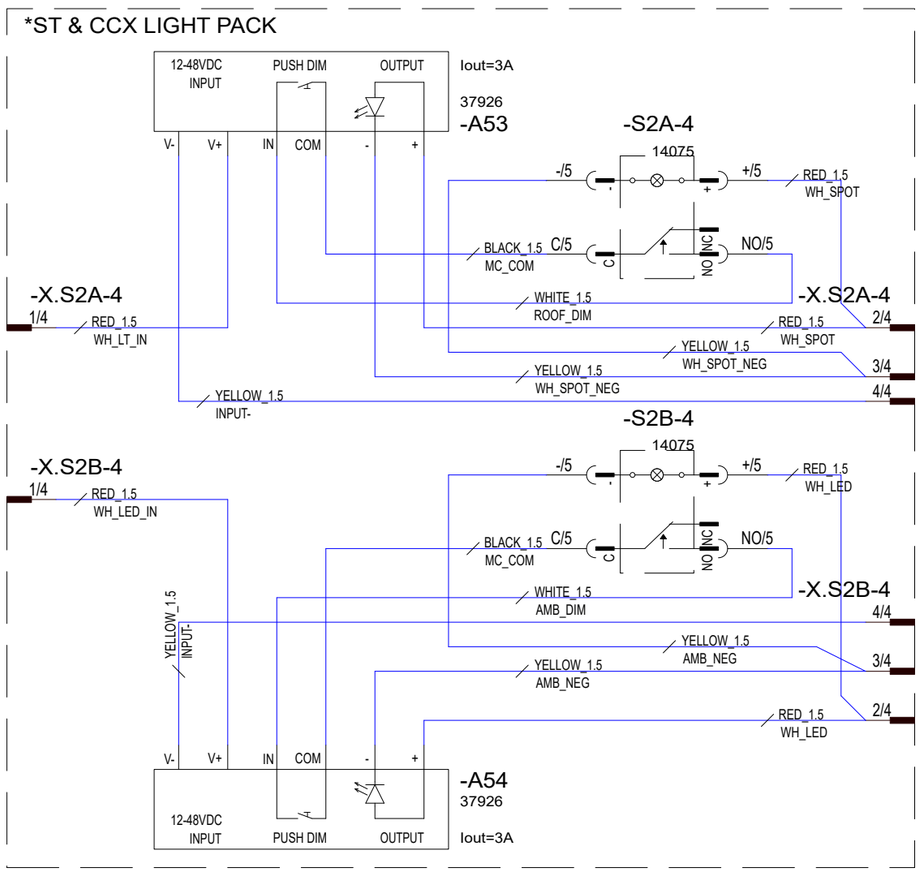

26.4.2024	PF	C5: 2005089; New page	Date	25.4.2024	NAVIX	Axopar		DIAGRAM	2004468
8.8.2024	PF	C6: 2005089; Not modified	Drawing by	PF		Boat	Sub-product code	Product code	Project ID
1.10.2024	PF	C7: 2005259; H4A- & H4B- added	Sheet rev.	7		28 MK3	LIGHTS MAIN CABIN ST/CCX	HL	12 / 106
Date of modification	Modified by	Description	Project rev.	C	Copyright by	Boat model	Title	Loc	Sheet

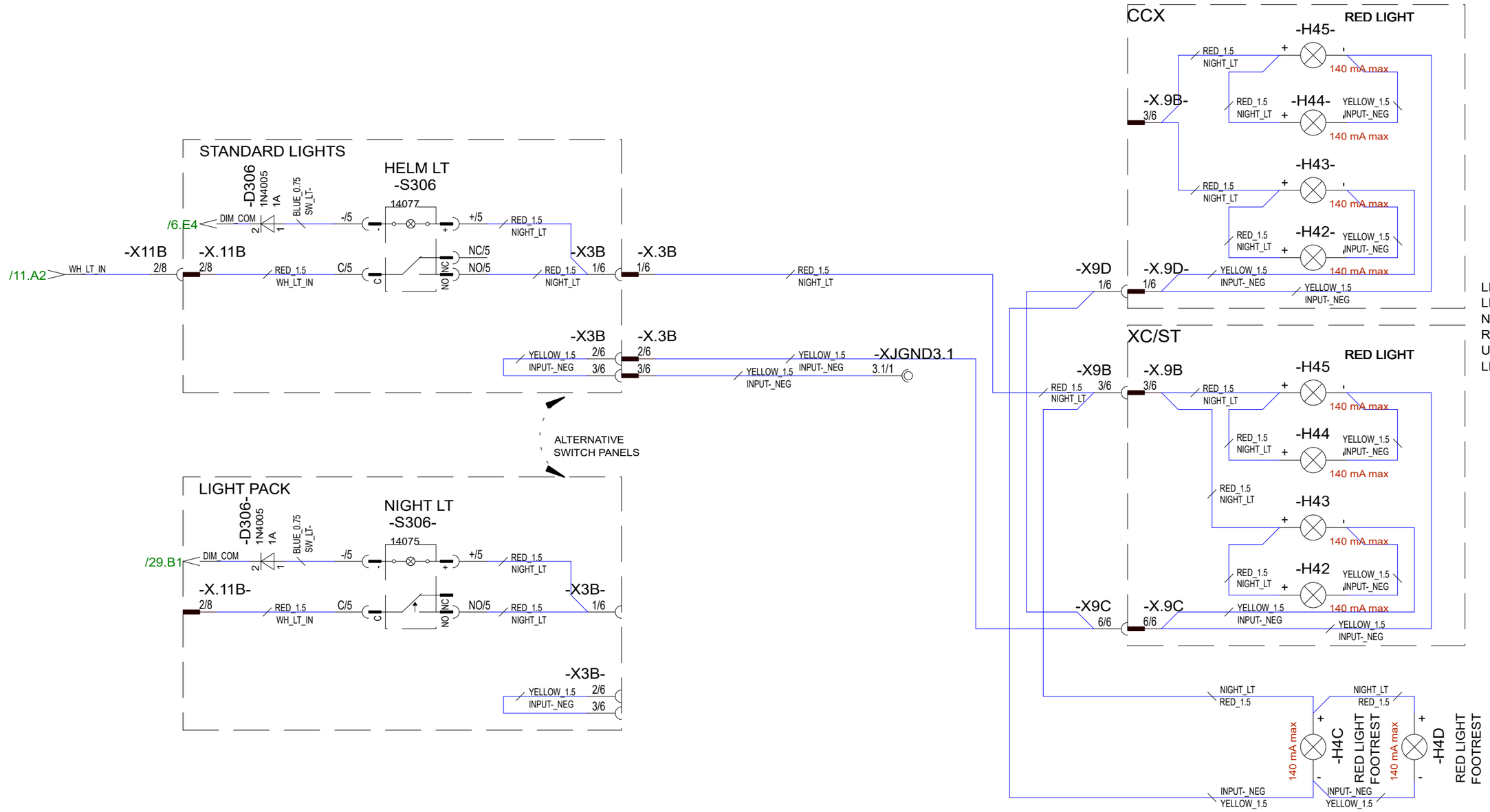

LIGHT PACK: RED LIGHTS
NON-LIGHT PACK: RED LIGHTS ARE USED AS 'HELM LIGHTS'

			Date 7.10.2024	NAVIX	Axopar		DIAGRAM	2004468
			Drawing by PF		Boat	Sub-product code	Product code	Project ID
7.10.2024	PF	C7:2005259;New sheet, ++red lts, helm lts->night lts, helm lts dim A42 remv	Sheet rev. 7		28 MK3	NIGHT LIGHTS	HL	13 / 106
Date of modification	Modified by	Description	Project rev. C	Copyright by	Boat model	Title	Loc	Sheet

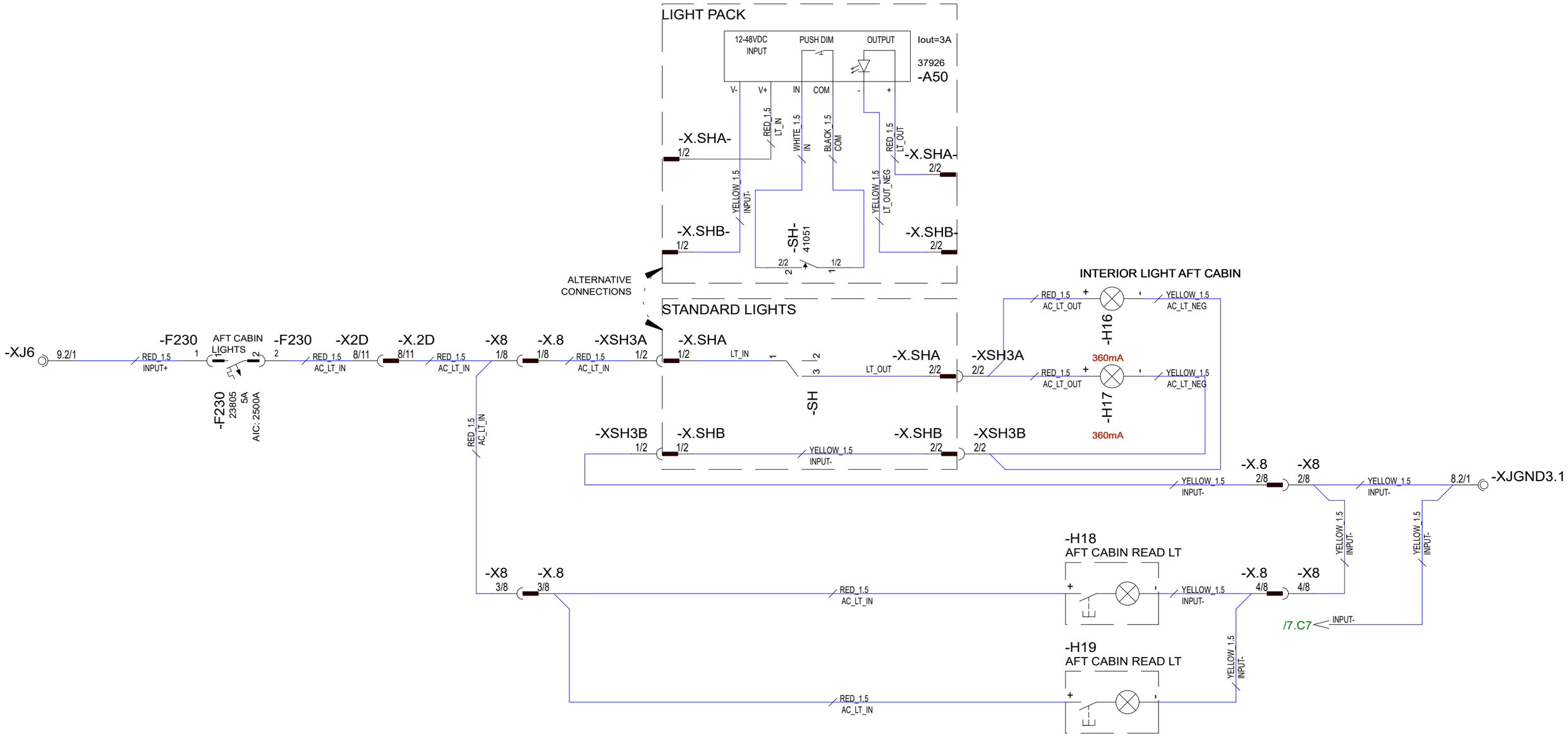

23.4.2024	PF	C5: 2005089; Standard switch neg. wire and LP version of switch added	Date	20.3.2023	NAVIX	Axopar		DIAGRAM	2004468
8.8.2024	PF	C6: 2005089; Not modified	Drawing by	PF		Boat	Sub-product code	Product code	Project ID
1.10.2024	PF	C7: 2005259; Not modified	Sheet rev.	7		28 MK3	LIGHTS AFT CABIN	HL	14 / 106
Date of modification	Modified by	Description	Project rev.	C	Copyright by	Boat model	Title	Loc	Sheet

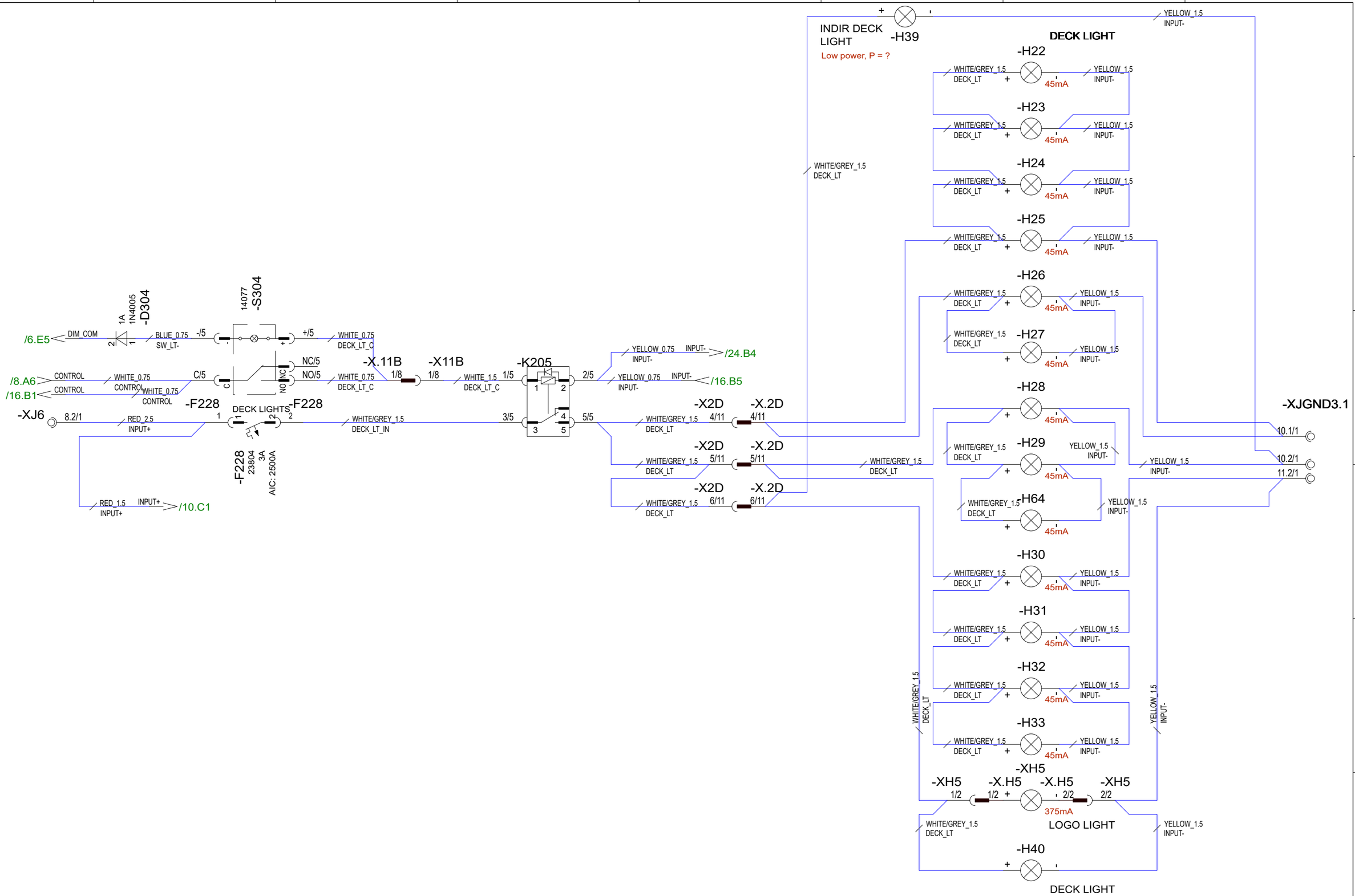

23.4.2024	PF	C5: 2005089; Relay type changed, STB deck lights added	Date	20.3.2023	NAVIX	Axopar		DIAGRAM	2004468
8.8.2024	PF	C6: 2005089; Not modified	Drawing by	PF		Boat	Sub-product code	Product code	Project ID
1.10.2024	PF	C7: 2005259; Change F228 10A->3A	Sheet rev.	7		28 MK3	DECK LIGHTS	HL	15 / 106
Date of modification	Modified by	Description	Project rev.	C	Copyright by	Boat model	Title	Loc	Sheet

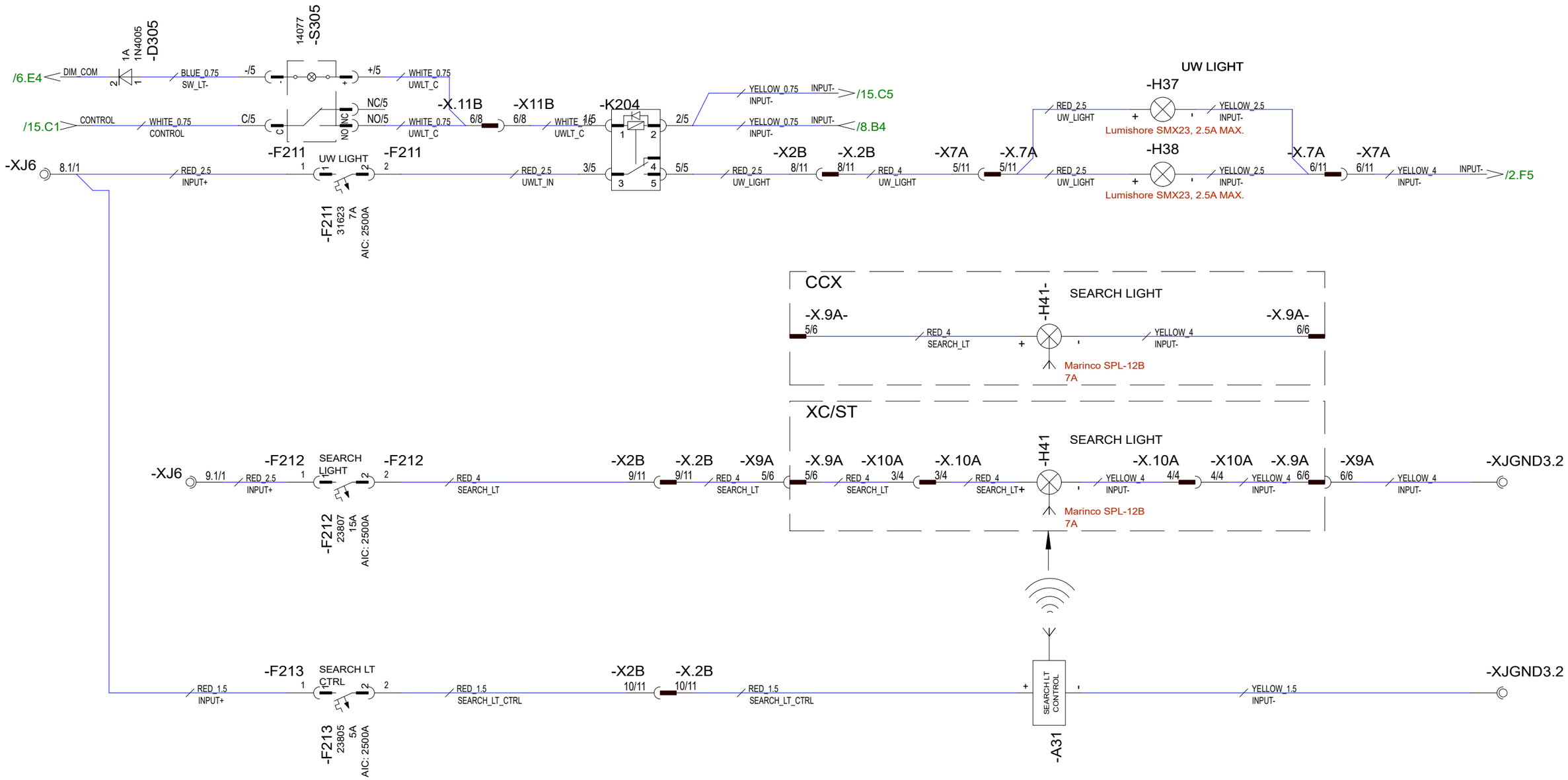

23.4.2024	PF	C5: 2005089; CCX reference added, relay type	Date	20.3.2023	NAVIX	Axopar		DIAGRAM	2004468
8.8.2024	PF	C6: 2005089; Not modified	Drawing by	PF		Boat	Sub-product code	Product code	Project ID
1.10.2024	PF	C7: 2005259; Not modified	Sheet rev.	7		28 MK3	UW LIGHTS, SEARCH LIGHT	HL	16 / 106
Date of modification	Modified by	Description	Project rev.	C	Copyright by	Boat model	Title	Loc	Sheet

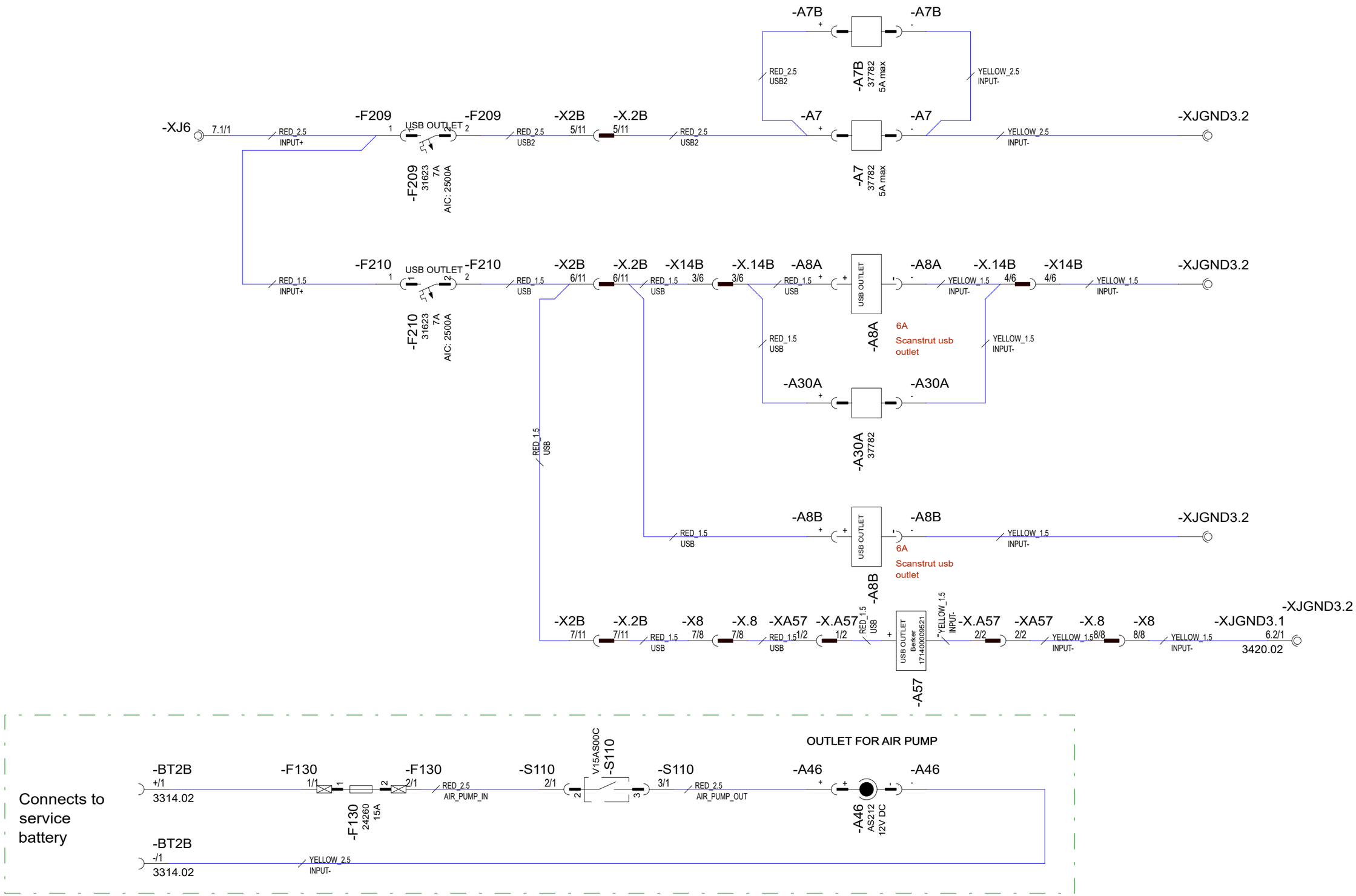

23.4.2024	PF	C5: 2005089; Not modified	Date	20.3.2023	NAVIX	Axopar		DIAGRAM	2004468
8.8.2024	PF	C6: 2005089; Not modified	Drawing by	PF		Boat	Sub-product code	Product code	Project ID
1.10.2024	PF	C7: 2005259; A57 added, A7&A7B wless ch->usb outlet, A30A type ch	Sheet rev.	7		28 MK3	USB OUTLET	HL	17 / 106
Date of modification	Modified by	Description	Project rev.	C	Copyright by	Boat model	Title	Loc	Sheet

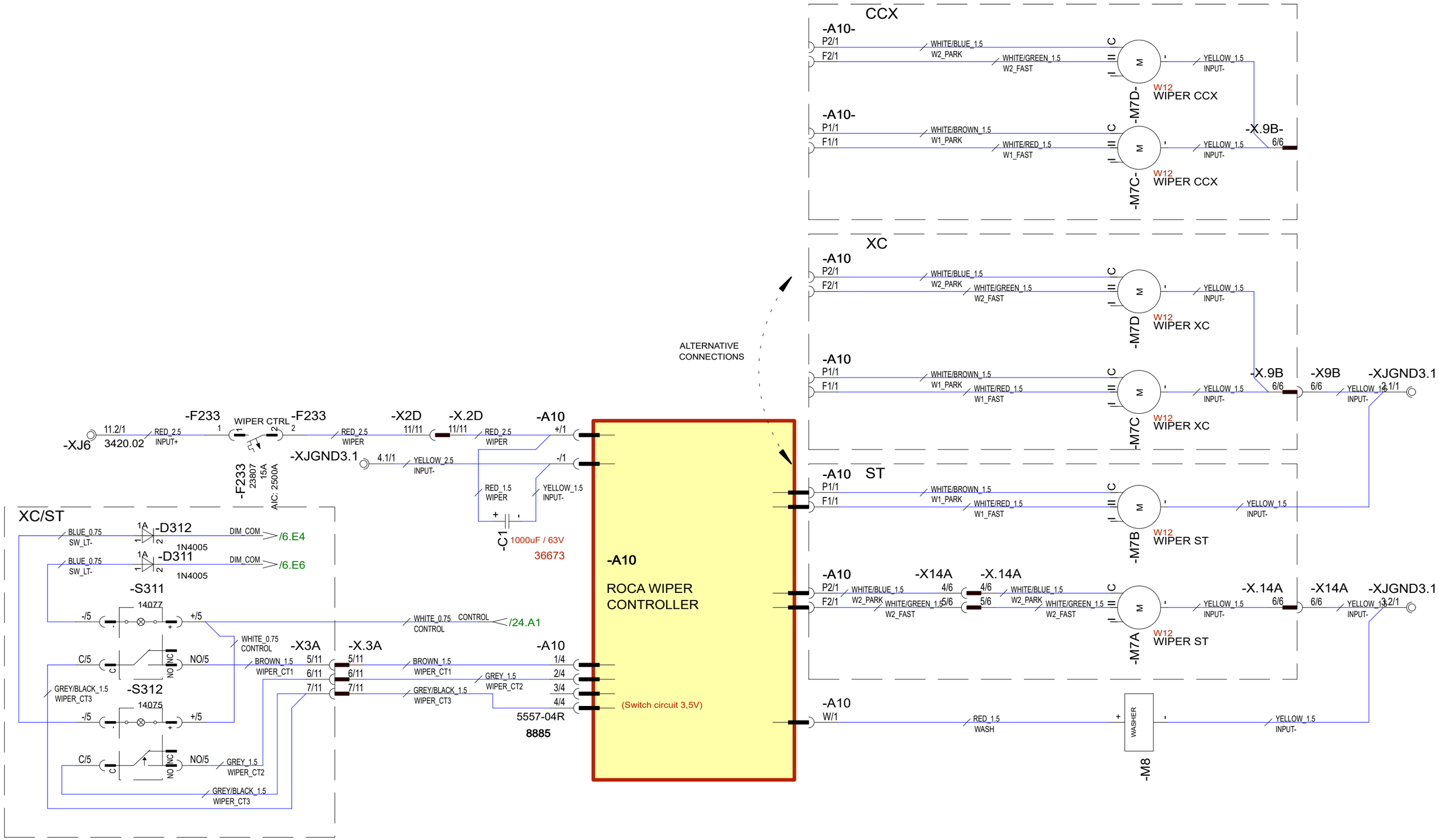

23.4.2024	PF	C5: 2005089;Wip sw->2xEAO &>>swp, CCX ref. & 2nd wiper to XC added	Date	20.3.2023	NAVIX	Axopar		DIAGRAM	2004468
8.8.2024	PF	C6: 2005089; Not modified	Drawing by	PF		Boat	Sub-product code	Product code	Project ID
1.10.2024	PF	C7: 2005259; A10 corrected, filter capacitor added	Sheet rev.	7		28 MK3	WIPERS	HL	18 / 106
Date of modification	Modified by	Description	Project rev.	C	Copyright by	Boat model	Title	Loc	Sheet

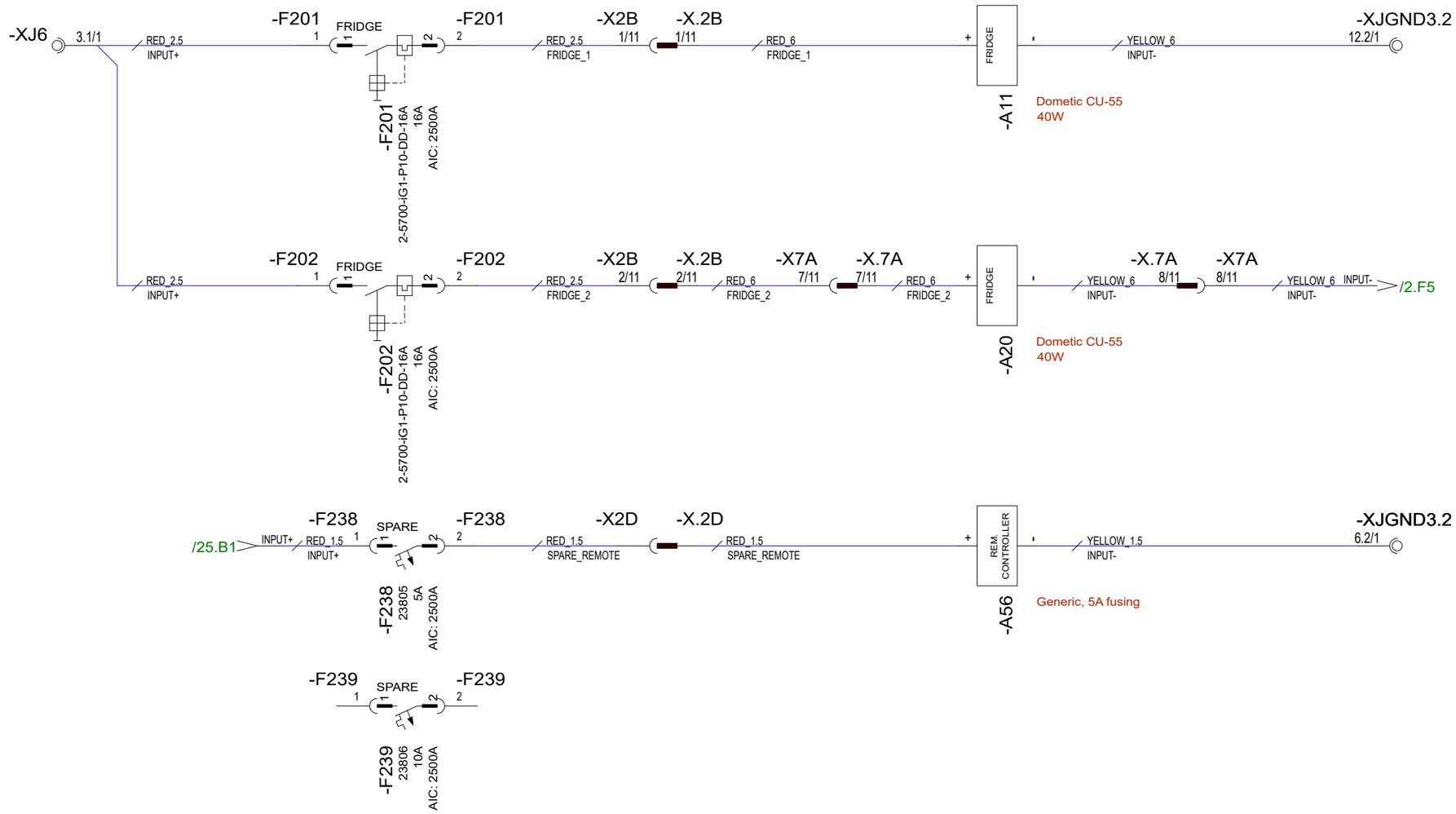

23.4.2024	PF	C5: 2005089; Fridge A20 model changed and moved to fender box	Date	20.3.2023	NAVIX	Axopar		DIAGRAM	2004468
8.8.2024	PF	C6: 2005089; Not modified	Drawing by	PF		Boat	Sub-product code	Product code	Project ID
1.10.2024	PF	C7: 2005259; Not modified	Sheet rev.	7		28 MK3	FRIDGES, SPARE	HL	19 / 106
Date of modification	Modified by	Description	Project rev.	C	Copyright by	Boat model	Title	Loc	Sheet

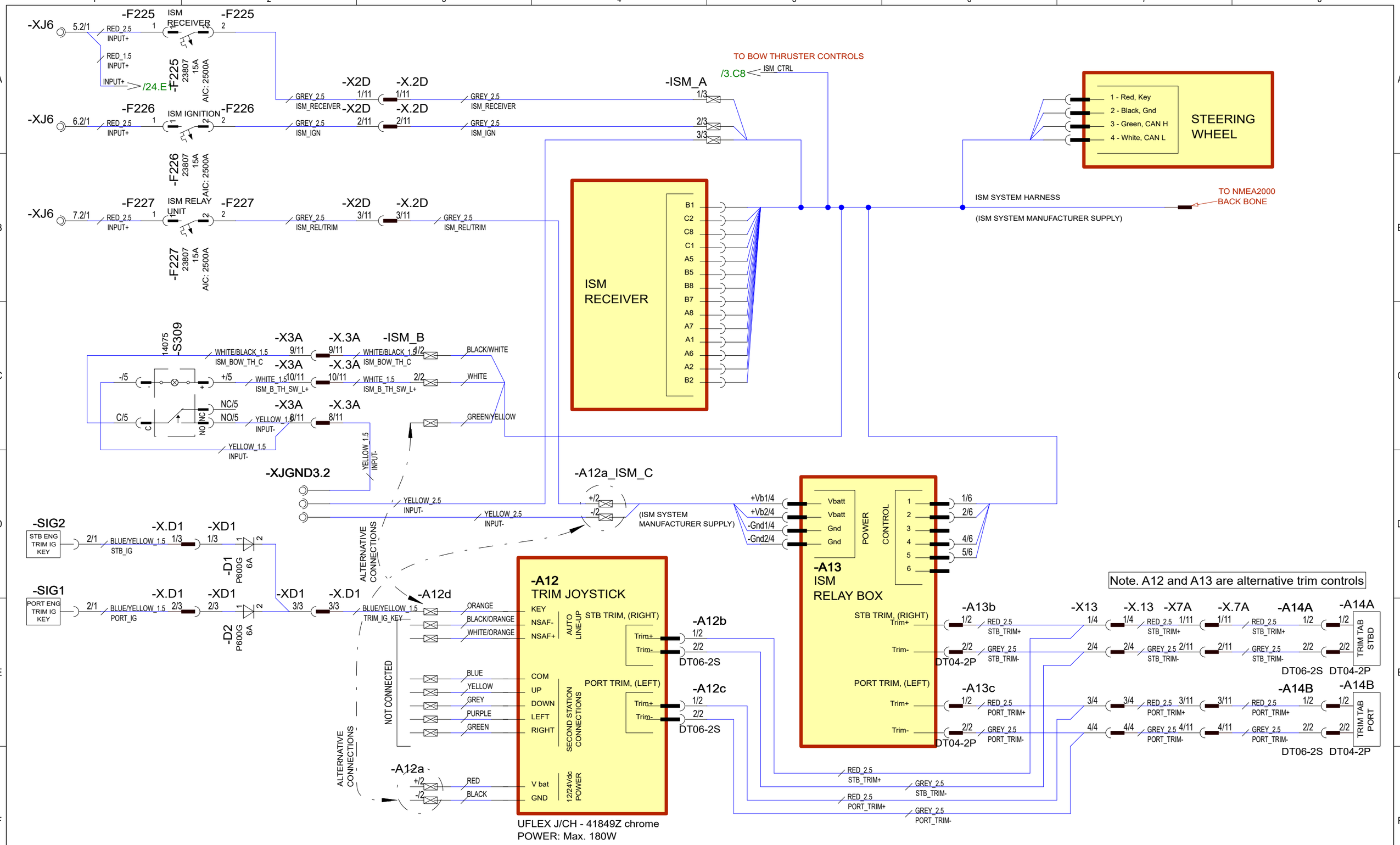

23.4.2024	PF	C5: 2005089; Not modified	Date	20.3.2023	NAVIX	Axopar		DIAGRAM	2004468
8.8.2024	PF	C6: 2005089; Not modified	Drawing by	PF		Boat	Sub-product code	Product code	Project ID
1.10.2024	PF	C7: 2005259; Not modified	Sheet rev.	7		28 MK3	TRIM/ISM SYSTEM	HL	20 / 106
Date of modification	Modified by	Description	Project rev.	C	Copyright by	Boat model	Title	Loc	Sheet

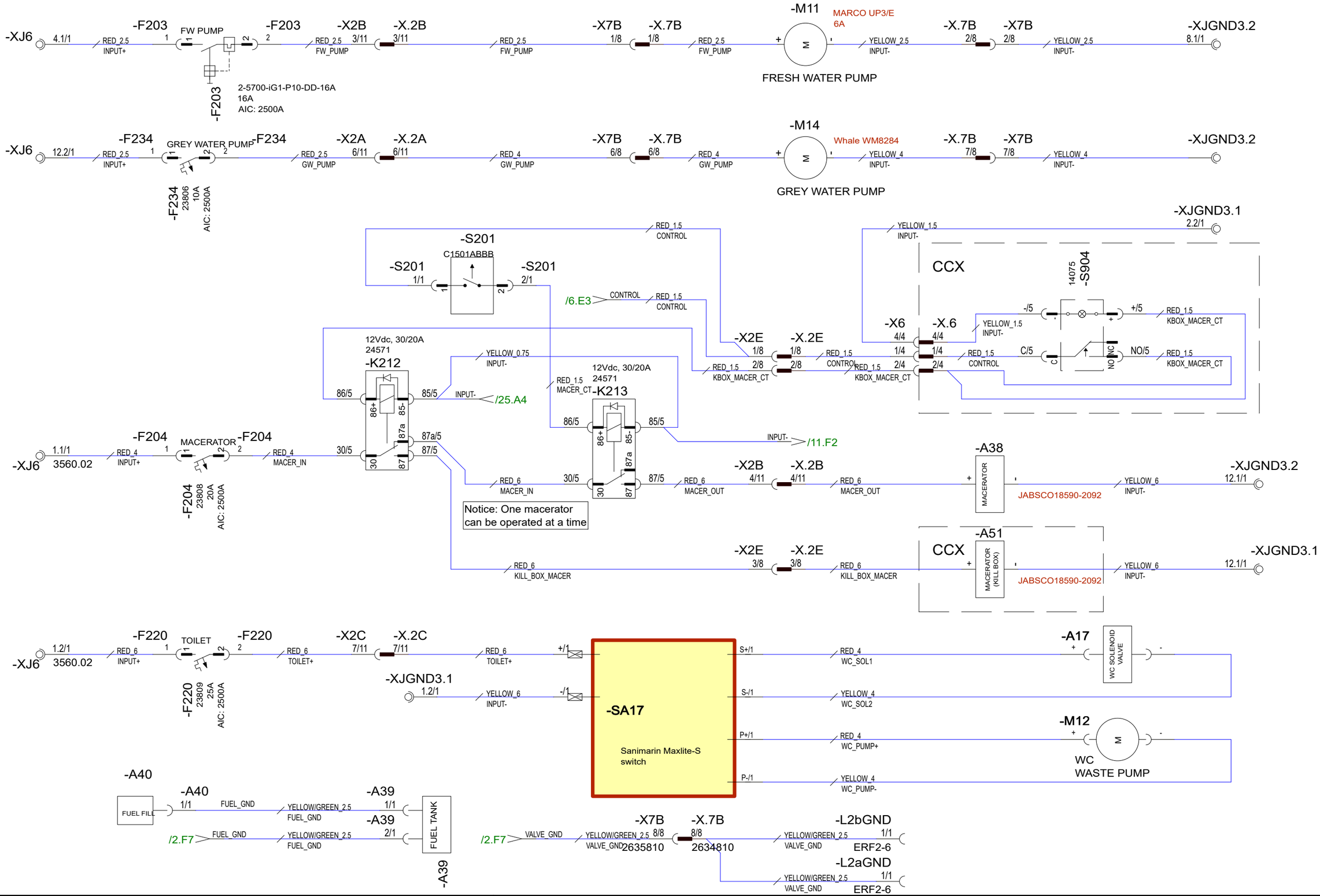

23.4.2024	PF	C5: 2005089; Kill box macerator+ctrl & GW pump added	Date	20.3.2023	NAVIX	Axopar		DIAGRAM	2004468
8.8.2024	PF	C6: 2005089; Valve L2 gnd added	Drawing by	PF		Boat	Sub-product code	Product code	Project ID
1.10.2024	PF	C7: 2005259; Not modified	Sheet rev.	7		28 MK3	FRESH WATER, TOILET, KILL BOX	HL	21/ 106
Date of modification	Modified by	Description	Project rev.	C	Copyright by	Boat model	Title	Loc	Sheet

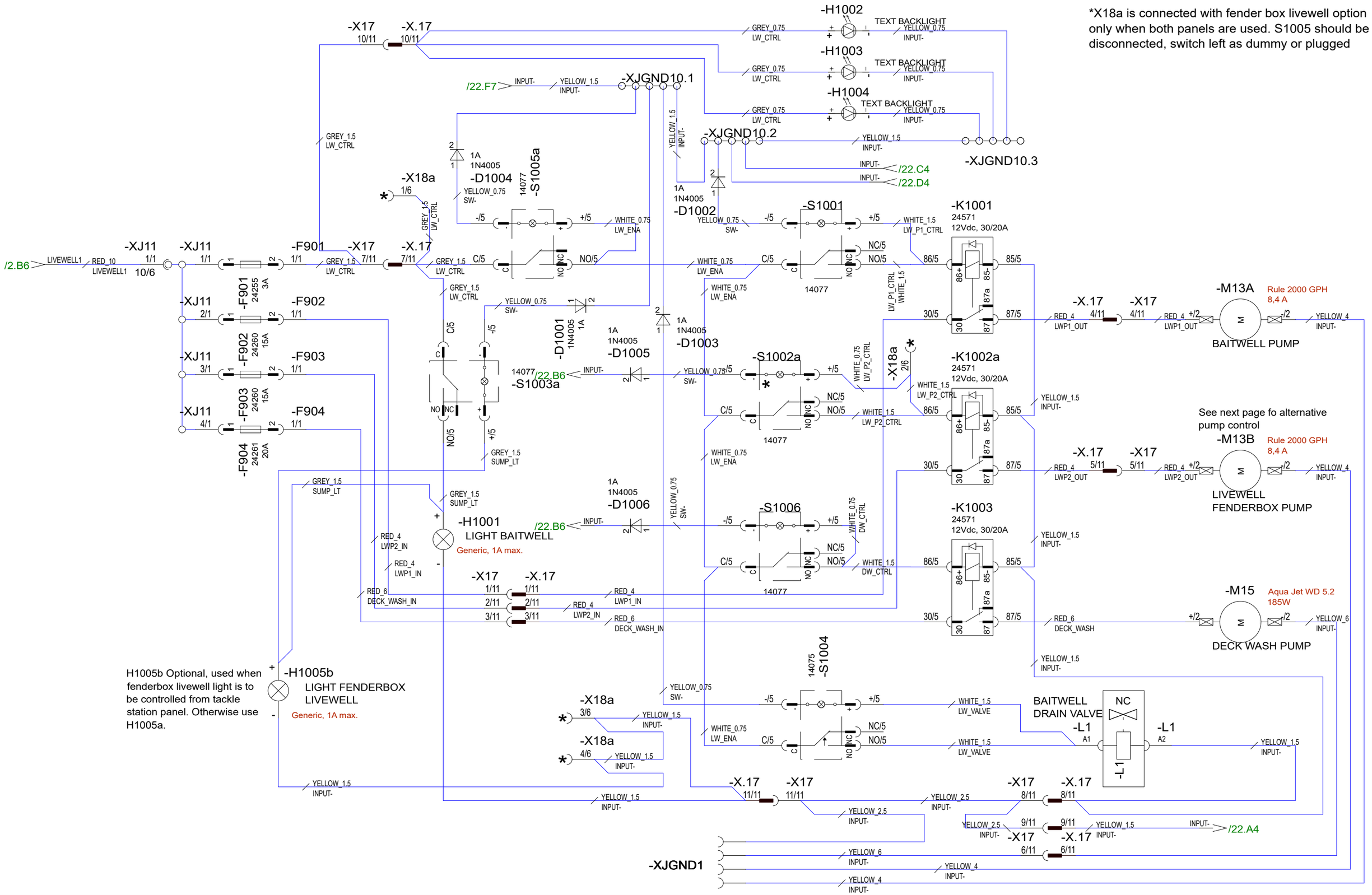

6.5.2024	PF	C5: 2005089; New page	Date	6.5.2024	NAVIX	Axopar		DIAGRAM	2004468
8.8.2024	PF	C6: 2005089; Not modified	Drawing by	PF		Boat	Sub-product code	Product code	Project ID
1.10.2024	PF	C7: 2005259; M13C -> M15 (funct. pump->deckwash), Fbox ctrl added	Sheet rev.	7		28 MK3	CCX LIVEWELL	HL	22 / 106
Date of modification	Modified by	Description	Project rev.	C	Copyright by	Boat model	Title	Loc	Sheet

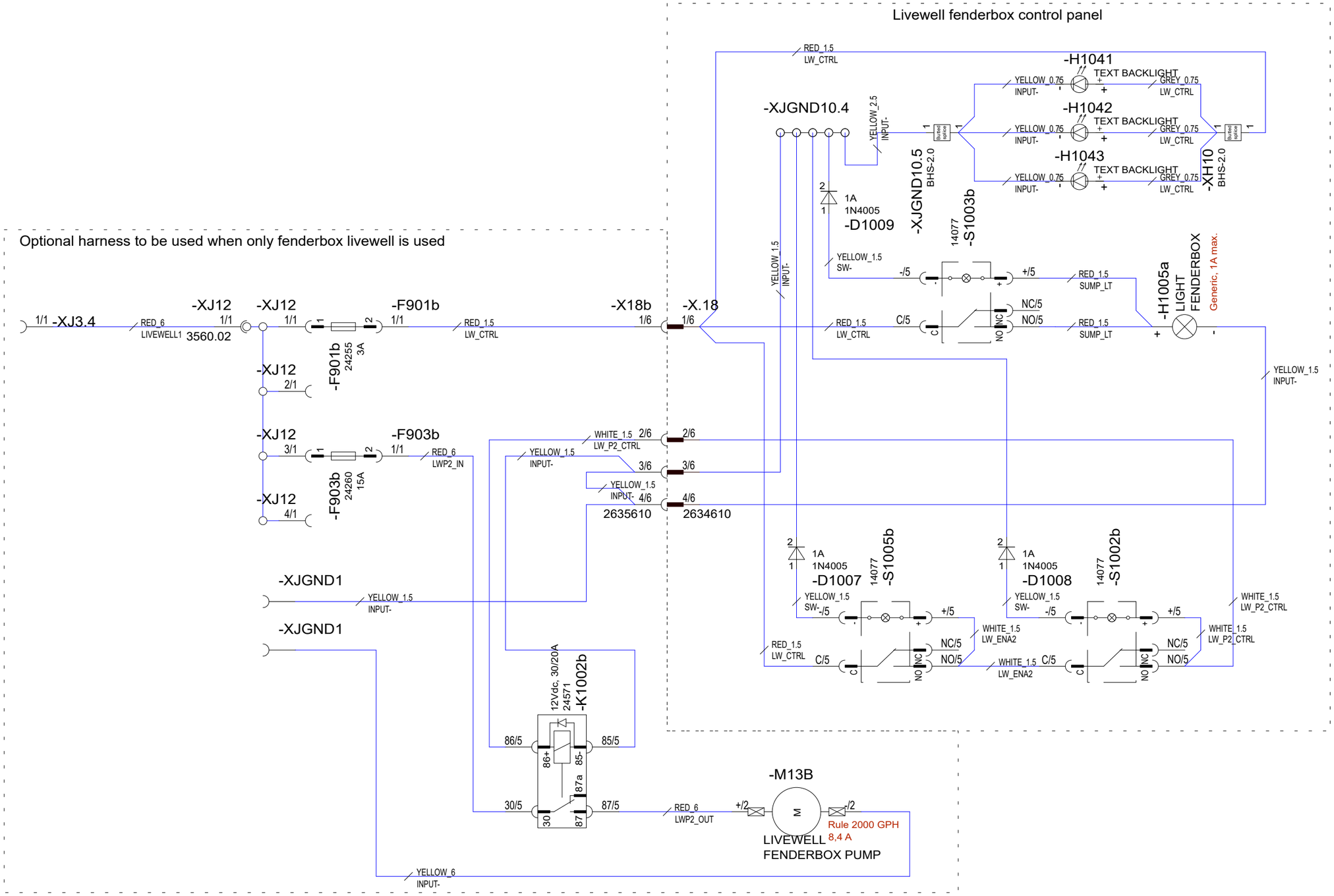

			Date 11.10.2024	NAVIX	Axopar		DIAGRAM	2004468
			Drawing by PF		Boat	Sub-product code	Product code	Project ID
1.10.2024	PF	C7: 2005259; New sheet, added fenderbox livewell panel and harness	Sheet rev. 7		28 MK3	CCX LIVEWELL FENDER BOX	HL	23 / 106
Date of modification	Modified by	Description	Project rev. C	Copyright by	Boat model	Title	Loc	Sheet

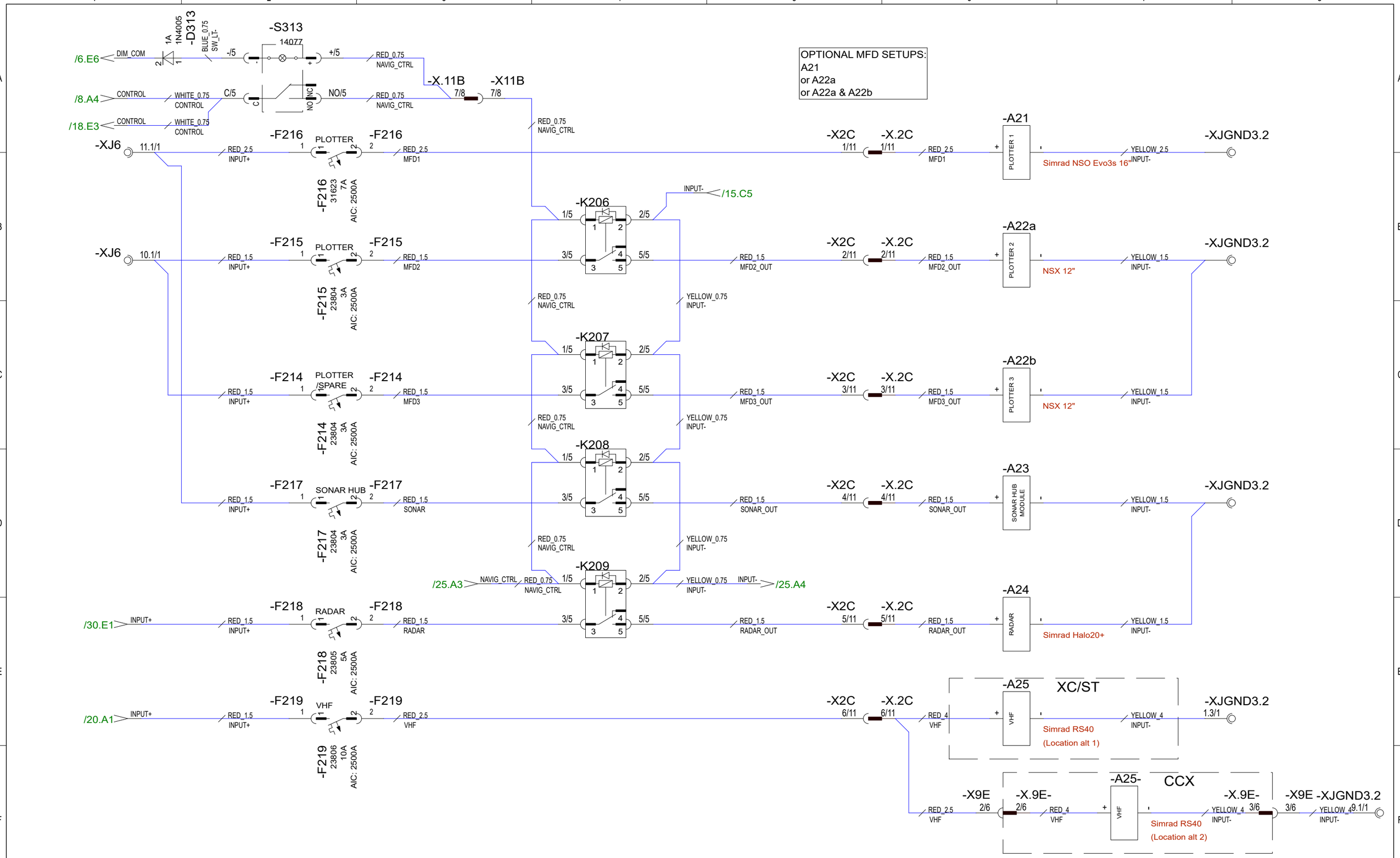

23.4.2024	PF	C5: 2005089;++: K206..K209 & S312 for nav eq., A25- alt. VHF loc in CCX	Date	22.3.2023	NAVIX	Axopar		DIAGRAM	2004468
8.8.2024	PF	C6: 2005089; Not modified	Drawing by	PF		Boat	Sub-product code	Product code	Project ID
1.10.2024	PF	C7: 2005259; Not modified	Sheet rev.	7		28 MK3	NAVIGATION & COMMUNICATION	HL	24 / 106
Date of modification	Modified by	Description	Project rev.	C	Copyright by	Boat model	Title	Loc	Sheet

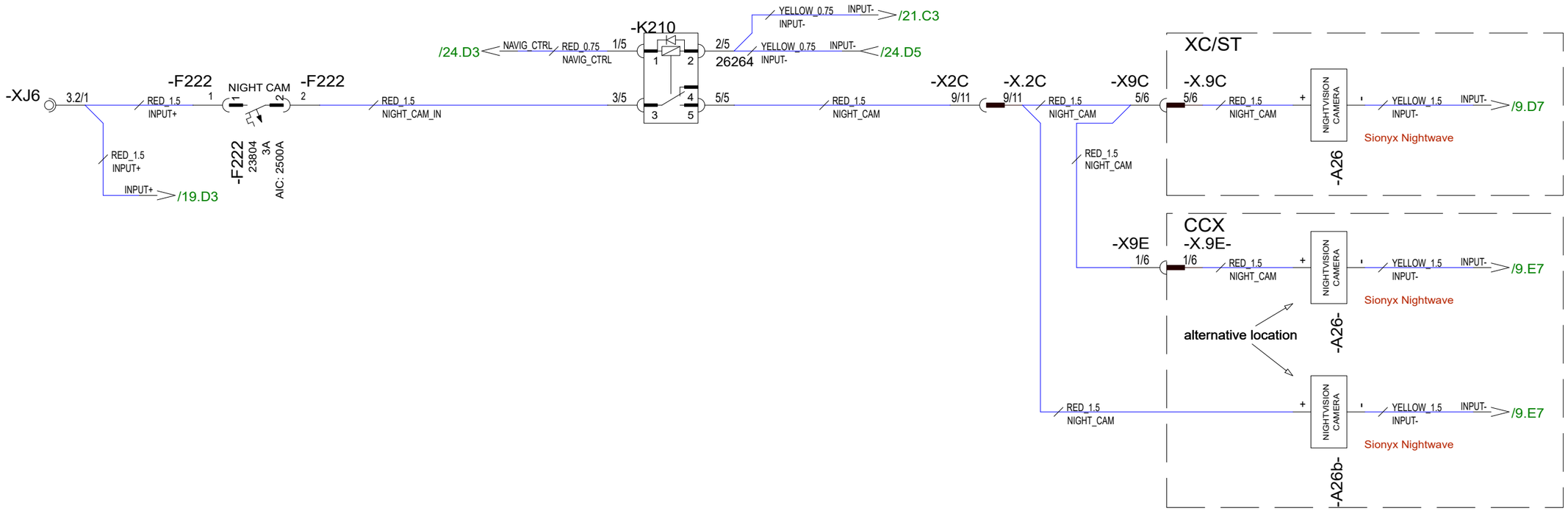

23.4.2024	PF	C5: 2005089; CCX reference and K210 added	Date	22.3.2023	NAVIX	Axopar		DIAGRAM	2004468
8.8.2024	PF	C6: 2005089; A26b- added, alt location for camera feed in CCX	Drawing by	PF		Boat	Sub-product code	Product code	Project ID
1.10.2024	PF	C7: 2005259; Not modified	Sheet rev.	7		28 MK3	CAMERA, BUS FEED	HL	25 / 106
Date of modification	Modified by	Description	Project rev.	C	Copyright by	Boat model	Title	Loc	Sheet

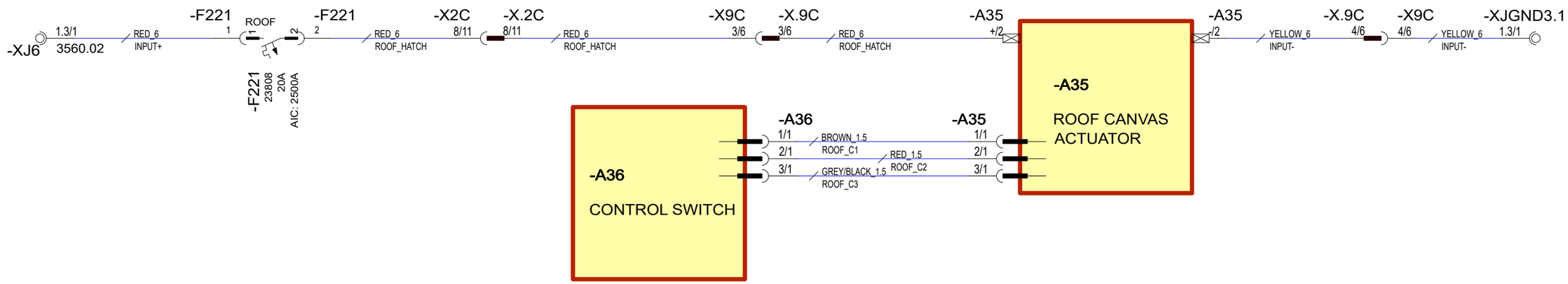

23.4.2024	PF	C5: 2005089; Not modified	Date	20.3.2023	NAVIX	Axopar		DIAGRAM	2004468
8.8.2024	PF	C6: 2005089; Not modified	Drawing by	PF		Boat	Sub-product code	Product code	Project ID
1.10.2024	PF	C7: 2005259; Not modified	Sheet rev.	7		28 MK3	ROOF	HL	26 / 106
Date of modification	Modified by	Description	Project rev.	C	Copyright by	Boat model	Title	Loc	Sheet

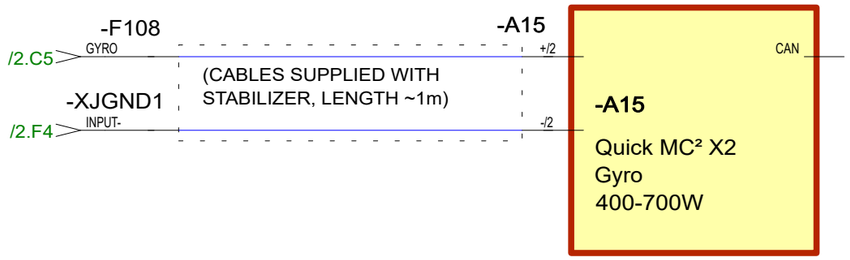

23.4.2024	PF	C5: 2005089; Not modified	Date 20.3.2023	NAVIX	Axopar		DIAGRAM	2004468
8.8.2024	PF	C6: 2005089; Not modified	Drawing by PF		Boat	Sub-product code	Product code	Project ID
1.10.2024	PF	C7: 2005259; Not modified	Sheet rev. 7		28 MK3	STABILIZER	HL	27 / 106
Date of modification	Modified by	Description	Project rev. C	Copyright by	Boat model	Title	Loc	Sheet

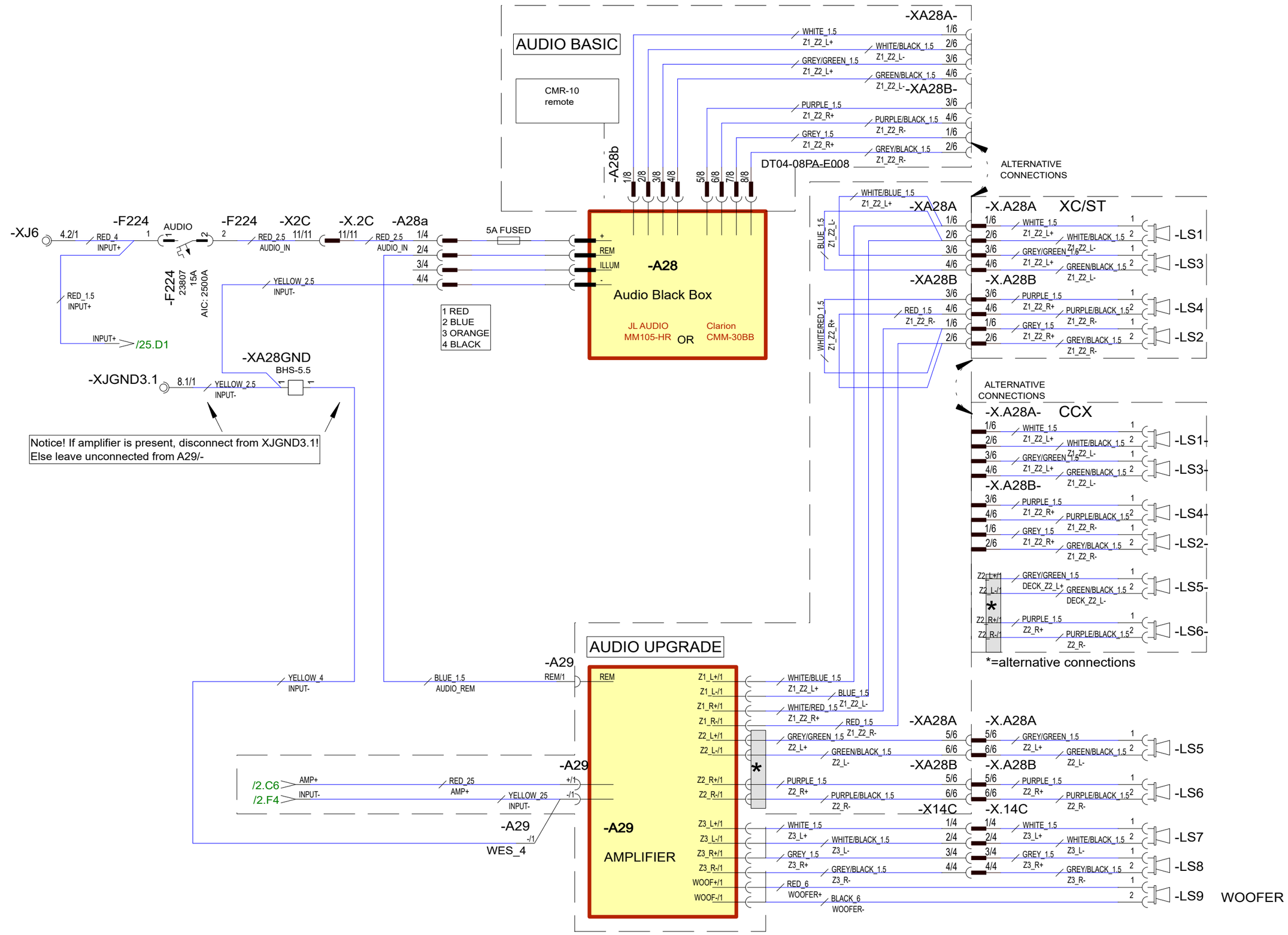

23.4.2024	PF	C5: 2005089; CCX reference added, option pages combined	Date	22.3.2023	NAVIX	Axopar		DIAGRAM	2004468
8.8.2024	PF	C6: 2005089; Not modified	Drawing by	PF		Boat	Sub-product code	Product code	Project ID
1.10.2024	PF	C7: 2005259; LS5-&LS6- (for CCX) added to deck harness	Sheet rev.	7		28 MK3	AUDIO SYSTEM	HL	28 / 106
Date of modification	Modified by	Description	Project rev.	C	Copyright by	Boat model	Title	Loc	Sheet

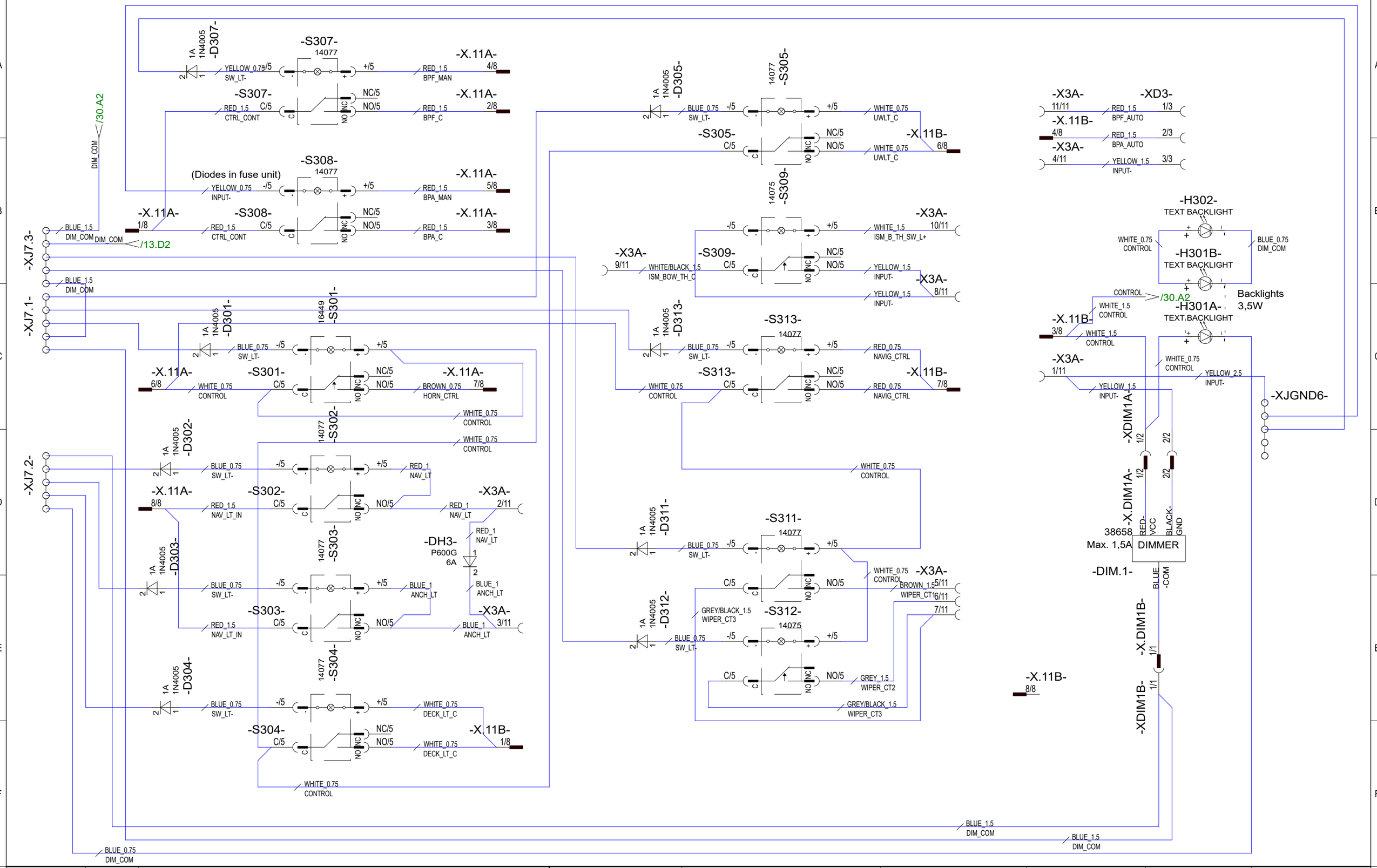

23.4.2024	PF	C5: 2005089; New page	Date	22.4.2024	NAVIX	Axopar		DIAGRAM	2004468
8.8.2024	PF	C6: 2005089; Not modified	Drawing by	PF		Boat	Sub-product code	Product code	Project ID
1.10.2024	PF	C7: 2005259; Not modified	Sheet rev.	7		28 MK3	LP SWITCH PANEL	HL	29 / 106
Date of modification	Modified by	Description	Project rev.	C	Copyright by	Boat model	Title	Loc	Sheet

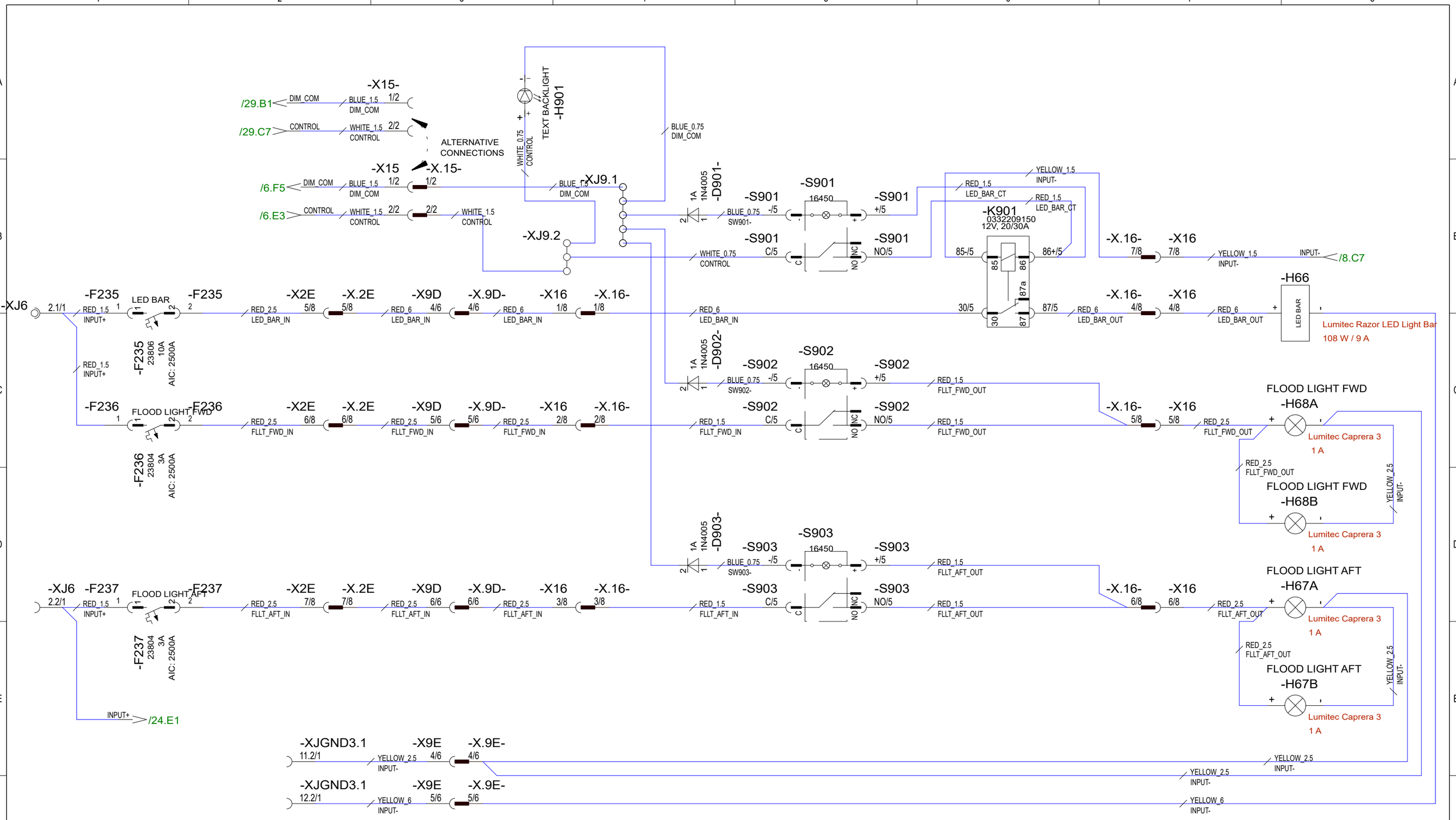

23.4.2024	PF	C5: 2005089; New page	Date	19.4.2024	NAVIX	Axopar		DIAGRAM	2004468
8.8.2024	PF	C6: 2005089; Not modified	Drawing by	PF		Boat	Sub-product code	Product code	Project ID
1.10.2024	PF	C7: 2005259; Not modified	Sheet rev.	7		28 MK3	CCX LIGHT CONTROL PANEL	HL	30 / 106
Date of modification	Modified by	Description	Project rev.	C	Copyright by	Boat model	Title	Loc	Sheet

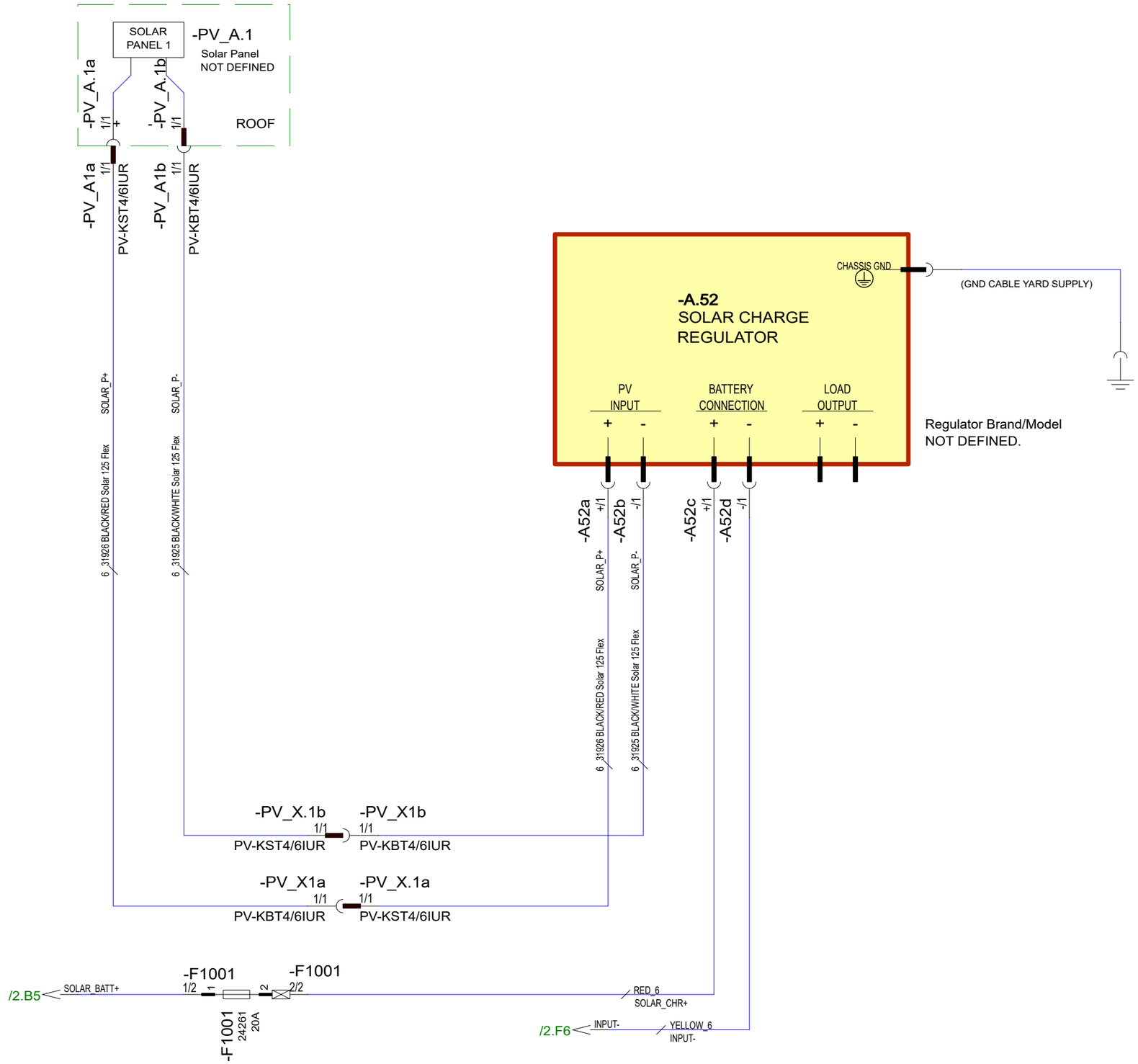

7.5.2024	PF	C5: 2005089; New page	Date	7.5.2024	NAVIX	Axopar		DIAGRAM	2004468
8.8.2024	PF	C6: 2005089; Not modified	Drawing by	PF		Boat	Sub-product code	Product code	Project ID
1.10.2024	PF	C7: 2005259; Not modified	Sheet rev.	7		28 MK3	SOLAR CHARGE REGULATOR	HL	31/ 106
Date of modification	Modified by	Description	Project rev.	C	Copyright by	Boat model	Title	Loc	Sheet

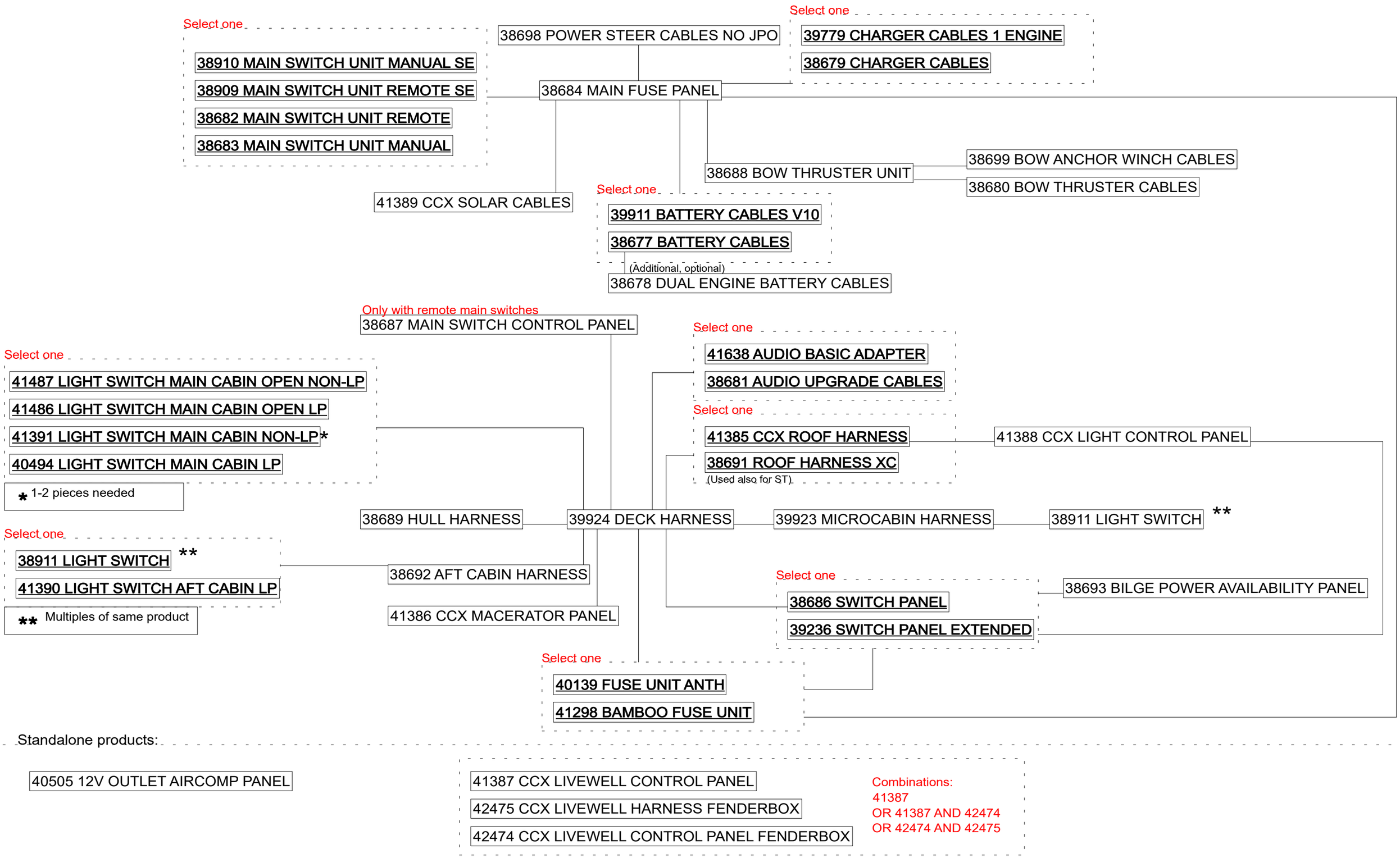

Date of modification	Modified by	Description
27.5.2024	PF	C5: 2005089; New page
8.8.2024	PF	C6: 2005089; Structure updated
1.10.2024	PF	C7: 2005259; Structure updated

Date	30.4.2024
Drawing by	PF
Sheet rev.	7
Project rev.	C

NAVIX
Copyright by

Axopar		DIAGRAM	2004468
Boat	Sub-product code	Product code	Project ID
28 MK3	PRODUCT STRUCTURE	HL	32 / 106
Boat model	Title	Loc	Sheet

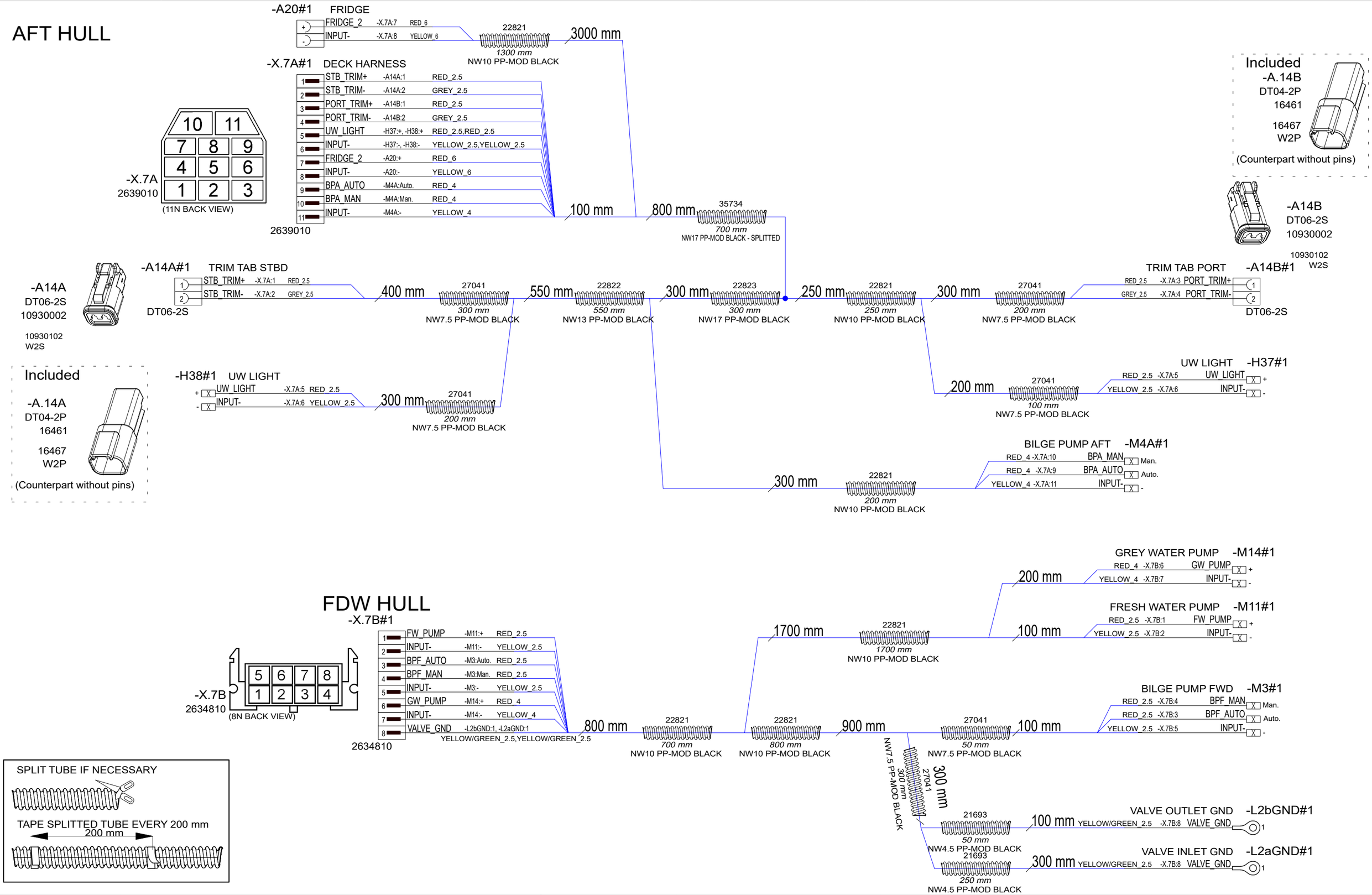

Date of modification	Modified by	Description
8.5.2024	PF	C4: 2005089; A20, M14 & trim tab counter connectors added
8.8.2024	PF	C5: 2005089; Length changes
14.10.2024	PF	C6: 2005259; Valve gnds added, fridge moved

Date	6.4.2023
Drawing by	PF
Sheet rev.	6
Project rev.	C

NAVIX
Copyright by

Axopar		38689	2004468
Boat	Sub-product code	Product code	Project ID
28 MK3	HULL HARNESS	HL	33 / 106
Boat model	Title	Loc	Sheet

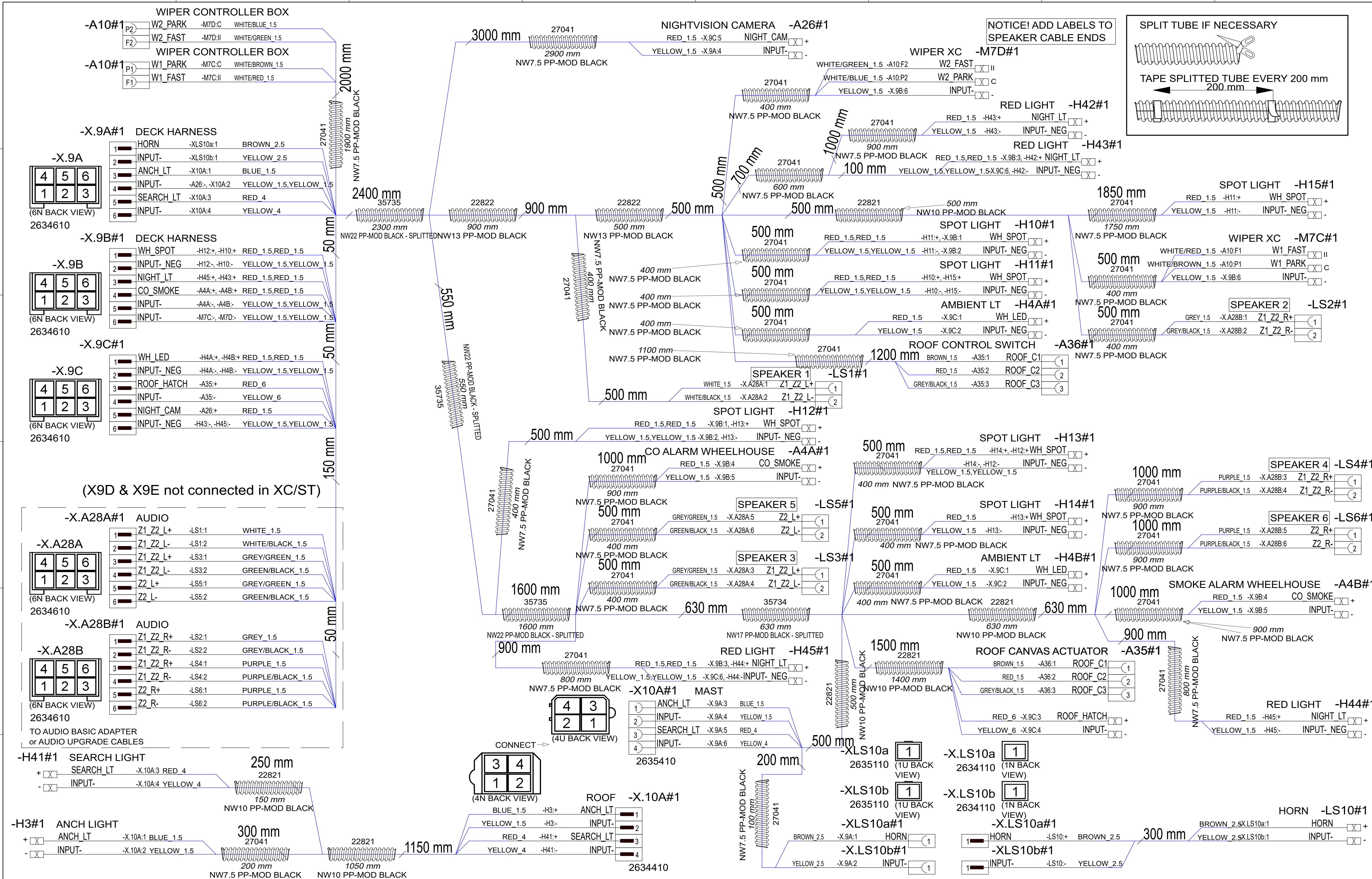

Date of modification	Modified by	Description
8.8.2024	PF	C5: 2005089; Mast harness: X10B removed, XLS10 added
7.10.2024	PF	C6: 2005259; H10&H11->spot lt, H42-H45 added, lt naming changed
13.5.2024	PF	C4: 2005089; Second wiper added, CCX adaptations

Date	22.3.2023
Drawing by	PF
Sheet rev.	6
Project rev.	C

NAVIX

Copyright by

Boat: Axopar	Sub-product code	Product code: 38691	Project ID: 2004468
Boat model: 28 MK3	Title: ROOF HARNESS XC	HL / Loc	Sheet: 34 / 106

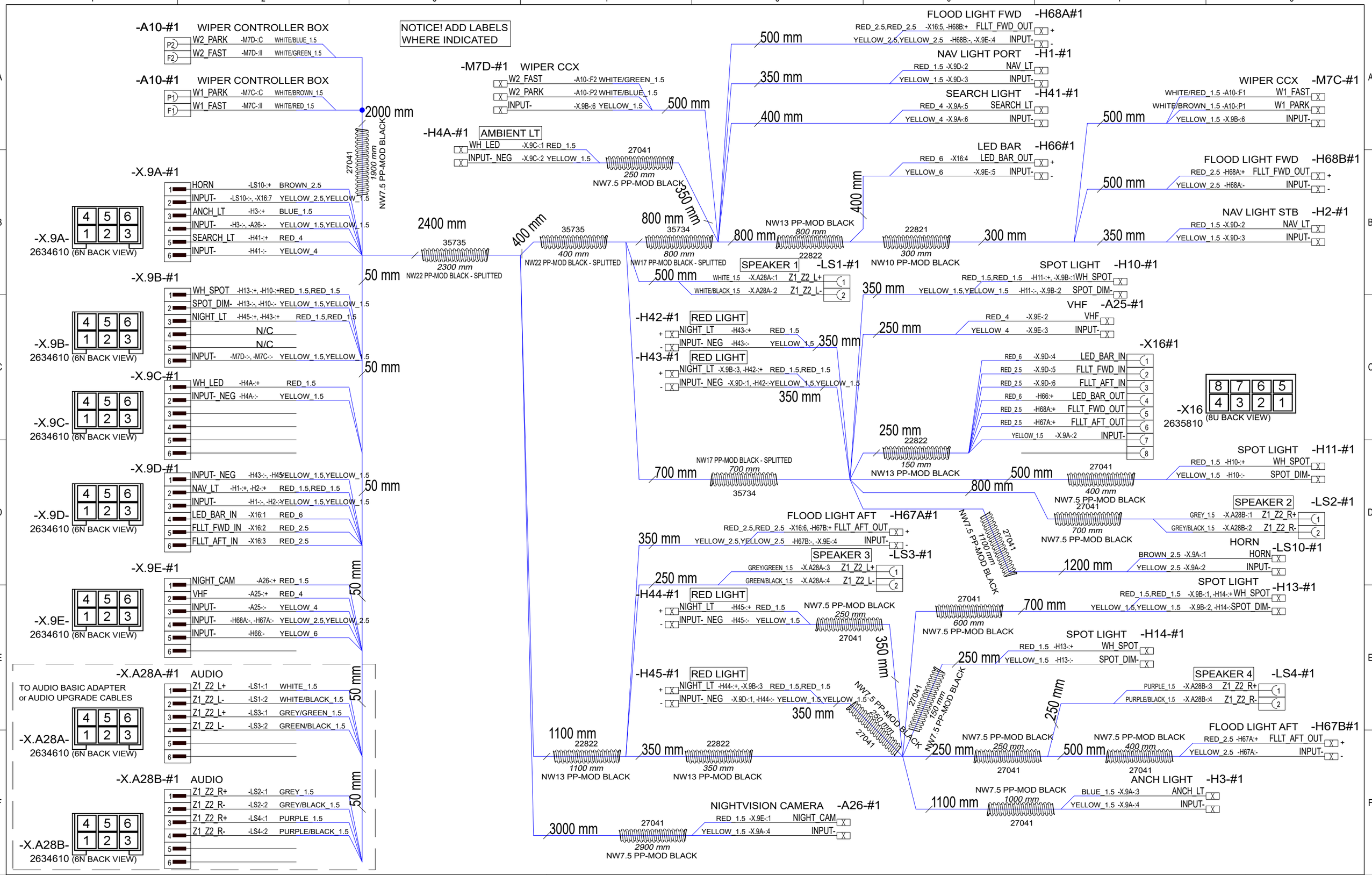

6.5.2024	PF	C1: 2005089; New product	Date	19.4.2024	NAVIX	Axopar		41385	2004468
14.10.2024	PF	C2: 2005259; H42-H45, H4A added, conduit changes	Drawing by	PF		Boat	Sub-product code	Product code	Project ID
			Sheet rev.	2		28 MK3	CCX ROOF HARNESS	HL	35 / 106
Date of modification	Modified by	Description	Project rev.	C	Copyright by	Boat model	Title	Loc	Sheet

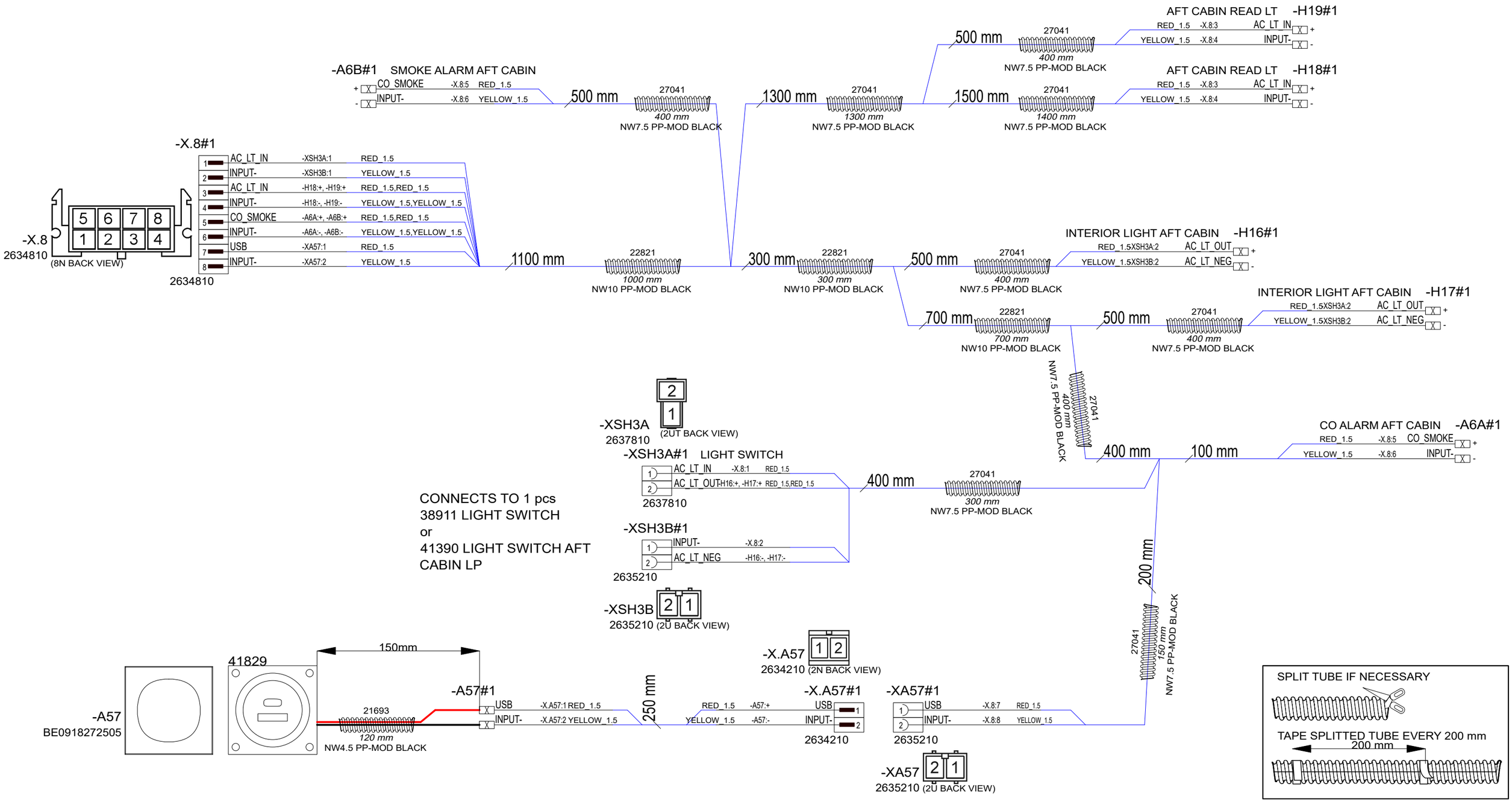

14.10.2024	PF	C5: 2005259; Branch & length changes, USB added	Date	27.3.2023	NAVIX	Axopar		38692	2004468
8.2.2024	PF	B3: 2005013; Added conduits	Drawing by	PF		Boat	Sub-product code	Product code	Project ID
26.4.2024	PF	C4: 2005089; XSH3 -> XSH3A & XSH3B (Light pack modification)	Sheet rev.	5		28 MK3	AFT CABIN HARNESS	HL	36 / 106
Date of modification	Modified by	Description	Project rev.	C	Copyright by	Boat model	Title	Loc	Sheet

CONNECTS TO FOLLOWING

39923 MICRO CABIN HARNESS (1-2 PCS)

38292 AFT CABIN HARNESS (1 PCS)

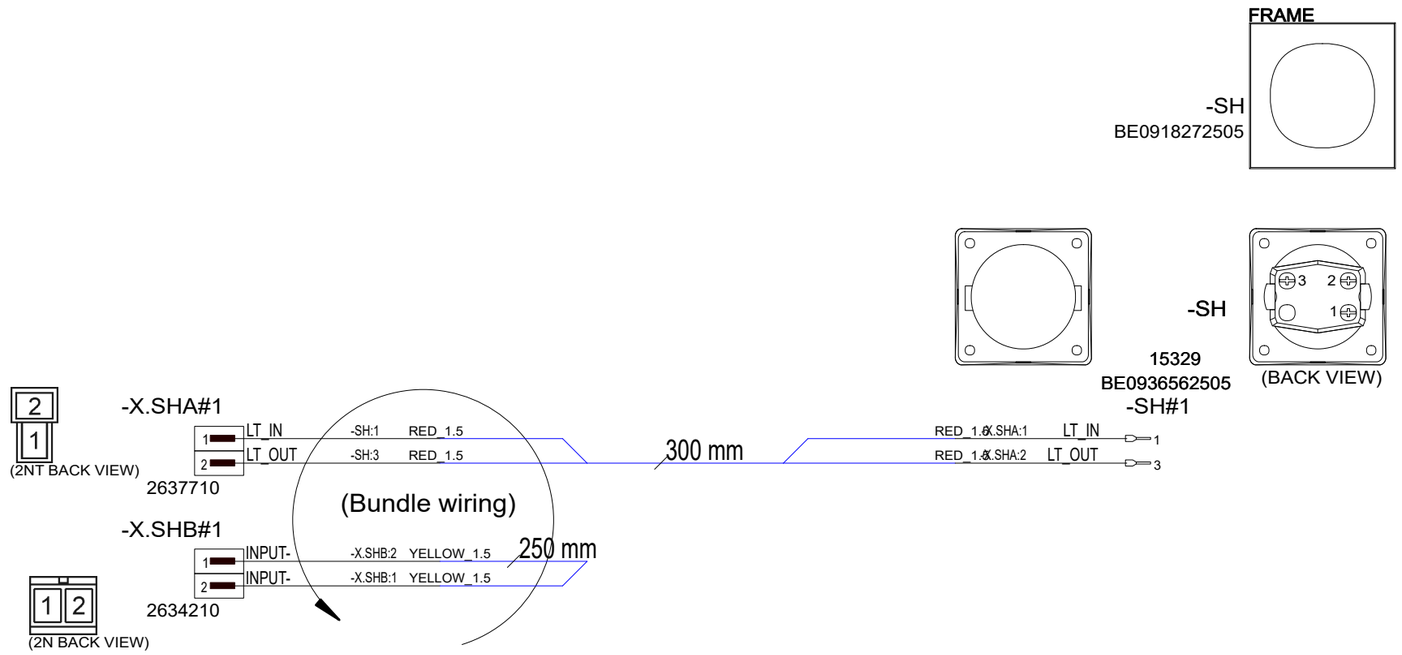

Customer: Only connect -X.SHB when product used in aft cabin. In multicabin leave unconnected.

Date of modification	Modified by	Description
9.2.2024	PF	B1: 2004980, 2004968 - no effect
26.4.2024	PF	C2: 2005089; Minus wire & B-connector added, wire color changed

Date	26.4.2023
Drawing by	PF
Sheet rev.	2
Project rev.	C

NAVIX

Copyright by

Axopar Boat	Sub-product code	38911 Product code	2004468 Project ID
28 MK3 Boat model	LIGHT SWITCH Title	HL Loc	37 / 106 Sheet

CONNECTS TO FOLLOWING

38692 AFT CABIN HARNESS 1 pcs

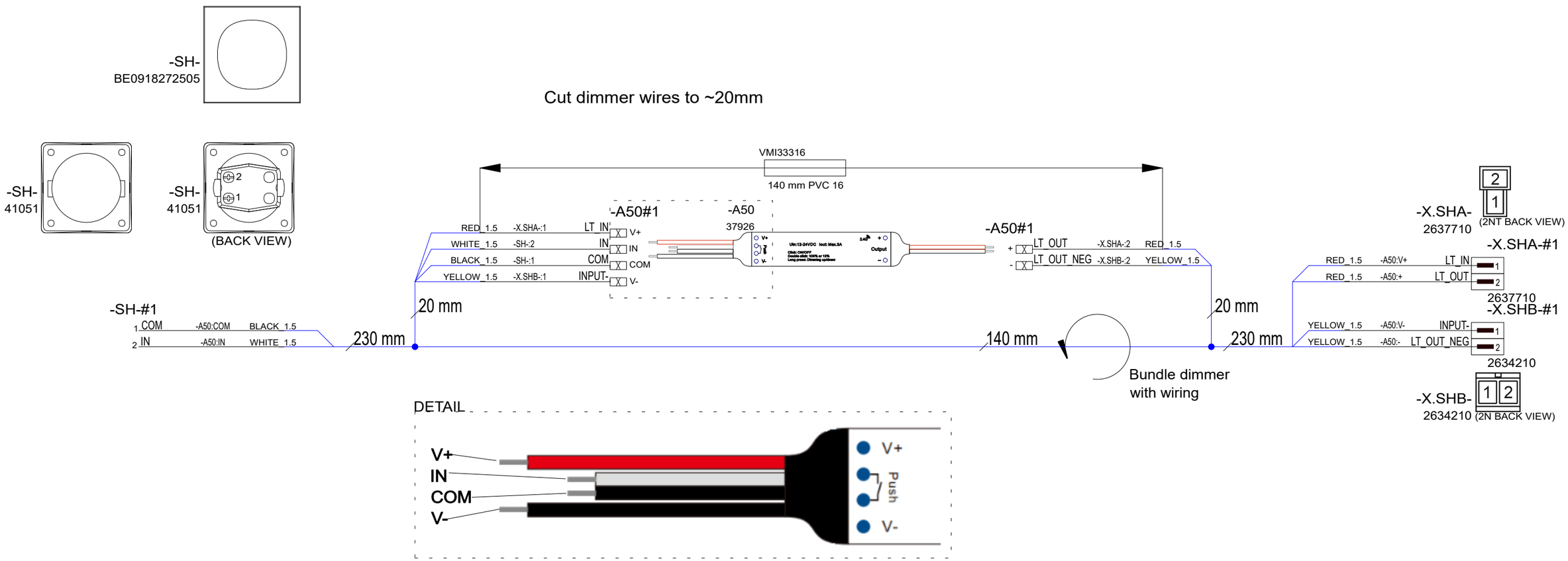

30.4.2024	PF	C1: 2005089; New product	Date	26.4.2024	NAVIX	Axopar		41390	2004468
			Drawing by	PF		Boat	Sub-product code	Product code	Project ID
			Sheet rev.	1		28 MK3	LIGHT SWITCH AFT CABIN LP	HL	38 / 106
Date of modification	Modified by	Description	Project rev.	C	Copyright by	Boat model	Title	Loc	Sheet

CONNECTS TO FOLLOWING

39924 DECK HARNESS 1 pcs

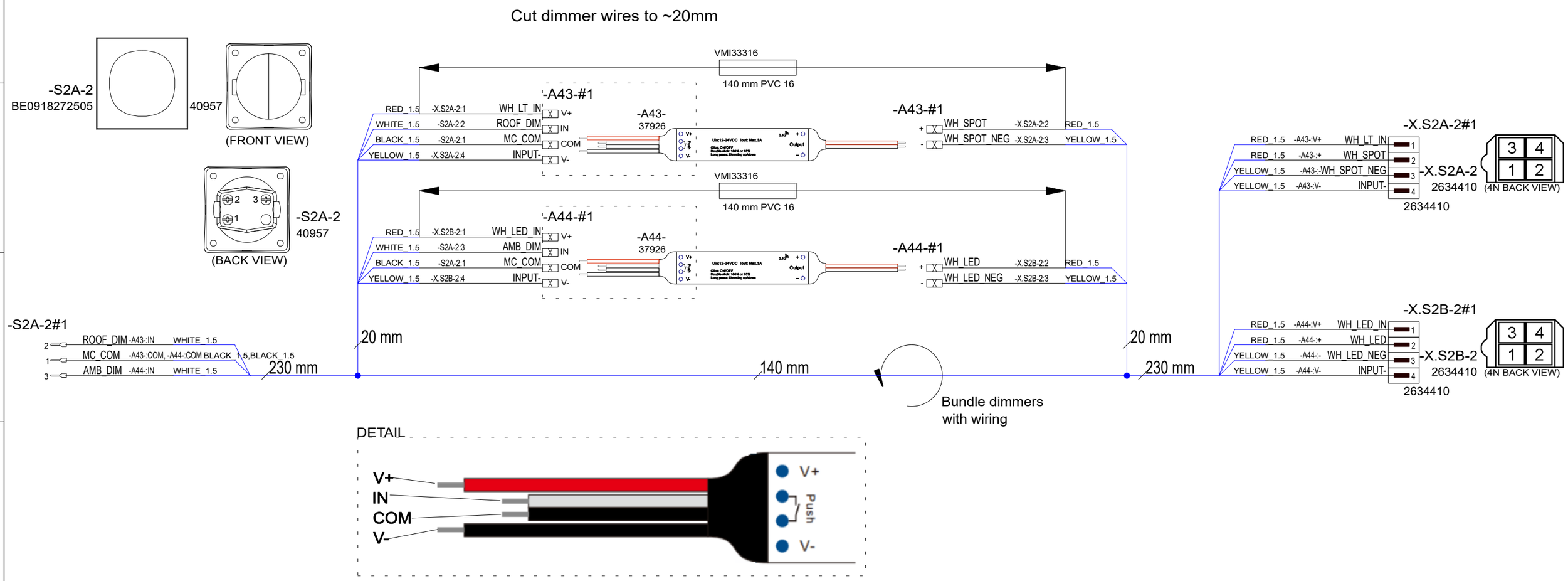

26.4.2024	PF	C1: 2005089; New product	Date	13.12.2023	NAVIX	Axopar		40494	2004468
			Drawing by	PF		Boat	Sub-product code	Product code	Project ID
			Sheet rev.	1		28 MK3	LIGHT SWITCH MAIN CABIN LP	HL	39 / 106
Date of modification	Modified by	Description	Project rev.	C	Copyright by	Boat model	Title	Loc	Sheet

CONNECTS TO FOLLOWING

39924 DECK HARNESS (1-2 pcs)

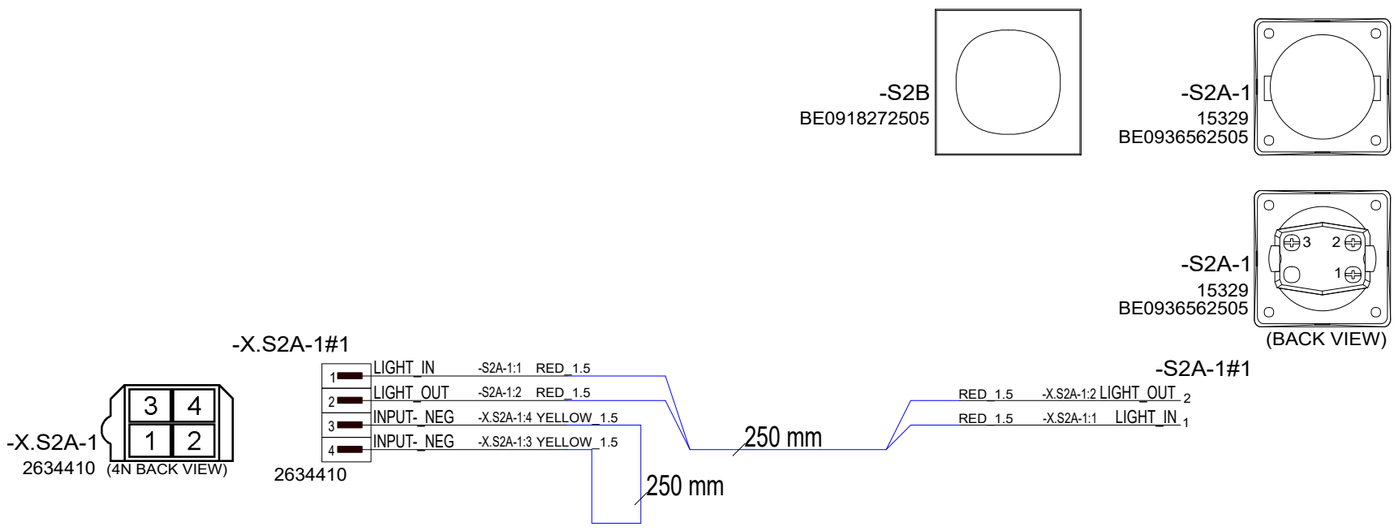

30.4.2024	PF	C1: 2005089; New product	Date	26.4.2024	NAVIX	Axopar		41391	2004468
			Drawing by	PF		Boat	Sub-product code	Product code	Project ID
			Sheet rev.	1		28 MK3	LIGHT SWITCH MAIN CABIN NON-LP	HL	40 / 106
Date of modification	Modified by	Description	Project rev.	C	Copyright by	Boat model	Title	Loc	Sheet

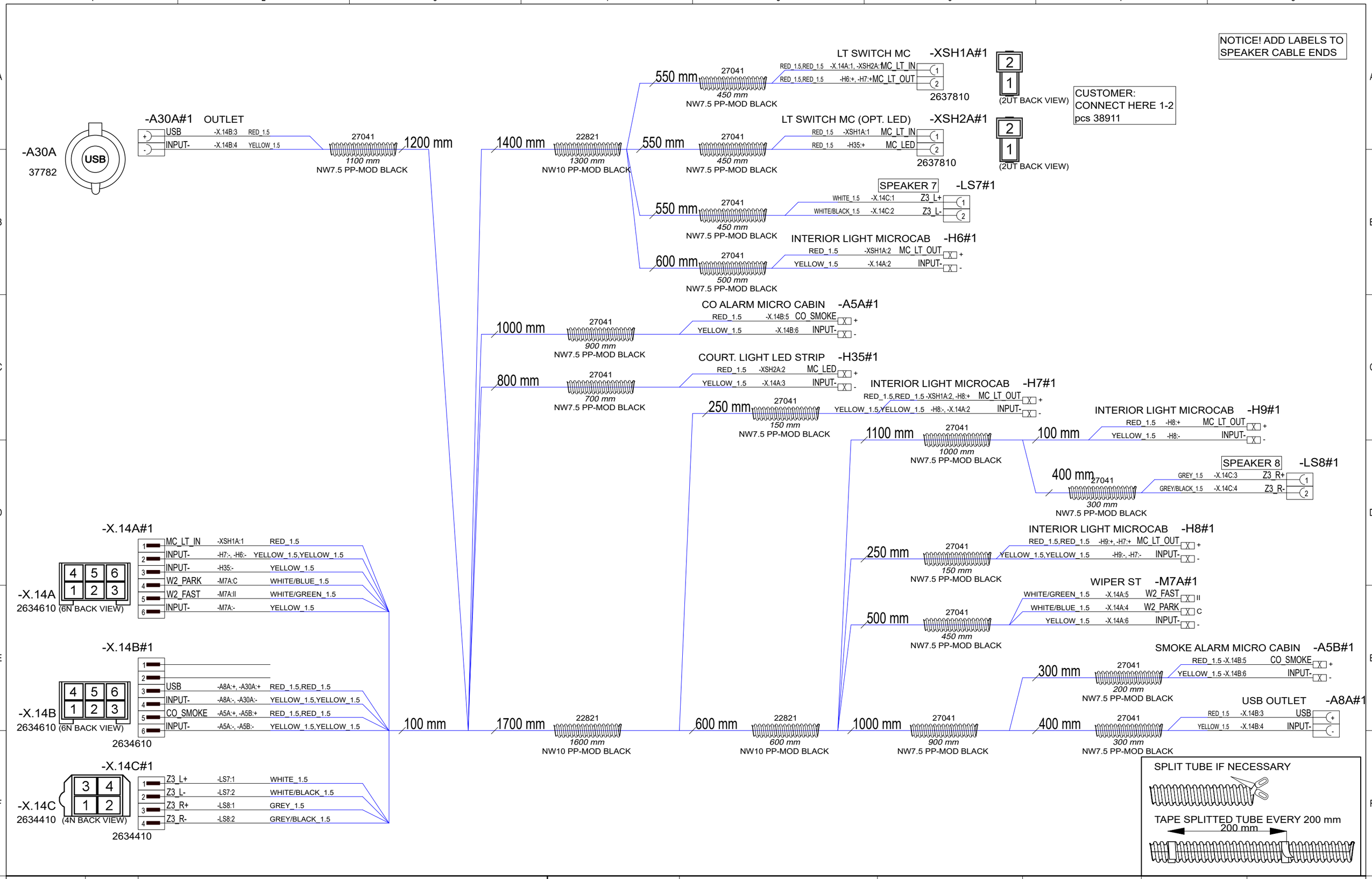

30.4.2024	PF	C3: 2005089; Speaker labels, removed deck lights, length&branch changes	Date	29.9.2023	NAVIX	Axopar		
9.8.2024	PF	C4: 2005089; X14 length 500->100	Drawing by	PF		Boat	Sub-product code	39923 Product code	2004468 Project ID
17.10.2024	PF	C5: 2005259; Lenght changes, A30A type changed	Sheet rev.	5		28 MK3	MICROCABIN HARNESS	HL
Date of modification	Modified by	Description	Project rev.	C	Copyright by	Boat model	Title	Loc	41/ 106 Sheet

DECK HARNESS - GENERAL LAYOUT

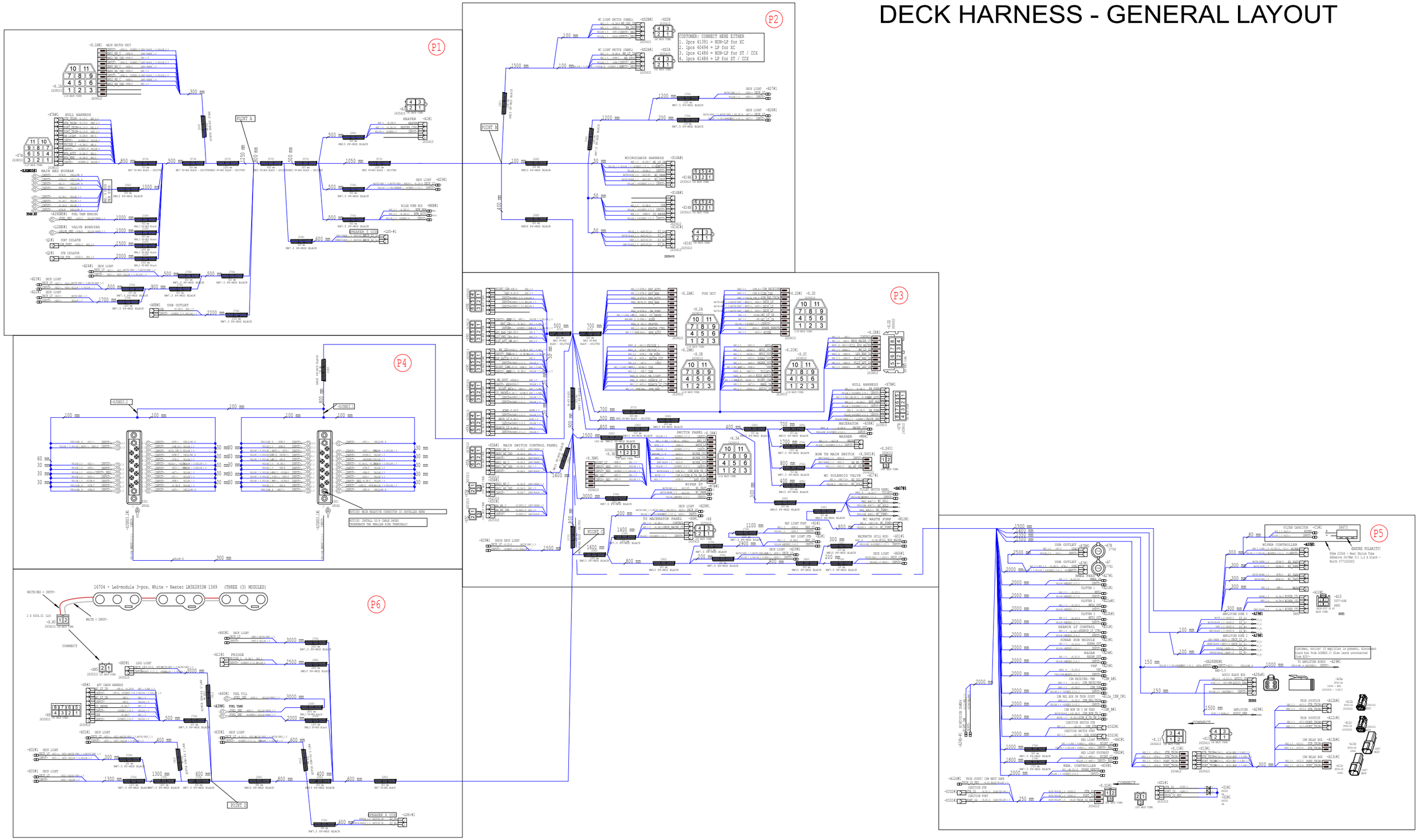

30.4.2024	PF	C4: 2005089; Light pack, branch and length changes	Date	24.4.2023	NAVIX	Axopar		39924	2004468
8.8.2024	PF	C5: 2005089; Night cam, length changes	Drawing by	PF		Boat	Sub-product code	Product code	Project ID
7.10.2024	PF	C6: 2005259; A29 Z2, WES, A29/-, C1 added, A7&A7B ->usb	Sheet rev.	6		28 MK3	DECK HARNESS	HL	42 / 106
Date of modification	Modified by	Description	Project rev.	C	Copyright by	Boat model	Title	Loc	Sheet

NOTE! BOXED TEXTS : MAKE A LABEL AND ATTACH TO SHOWN LOCATION

P1

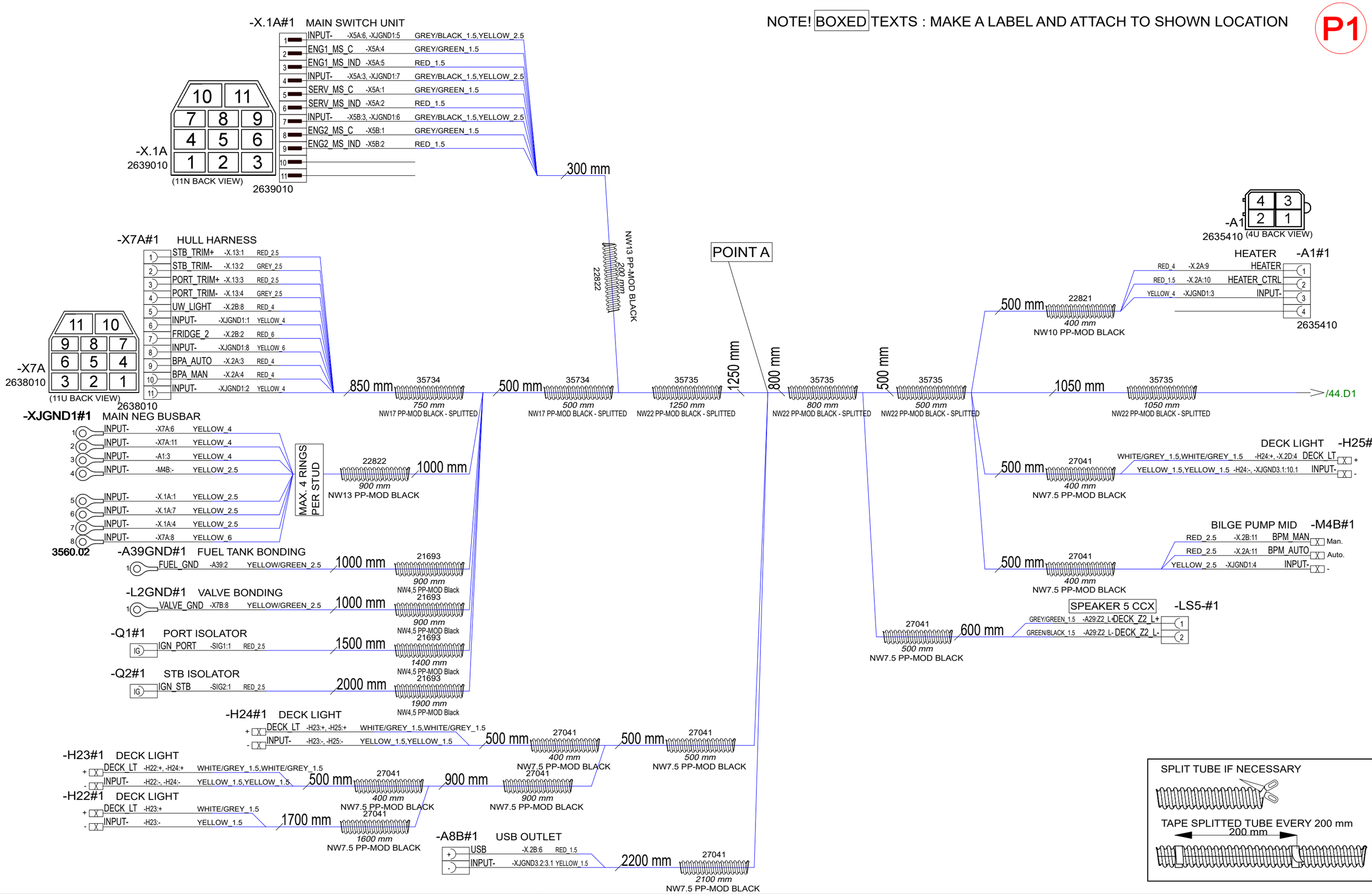

30.4.2024	PF	C4: 2005089; Light pack, branch and length changes	Date	24.4.2023	NAVIX	Axopar		39924 / 2004468
8.8.2024	PF	C5: 2005089; Night cam, length changes	Drawing by	PF		Boat	Sub-product code / Product code	Project ID
7.10.2024	PF	C6: 2005259; A29 Z2, WES, A29/-, C1 added, A7&A7B ->usb	Sheet rev.	6		28 MK3	DECK HARNESS	HL
Date of modification	Modified by	Description	Project rev.	C	Copyright by	Boat model	Title	Loc / Sheet 43 / 106

P2

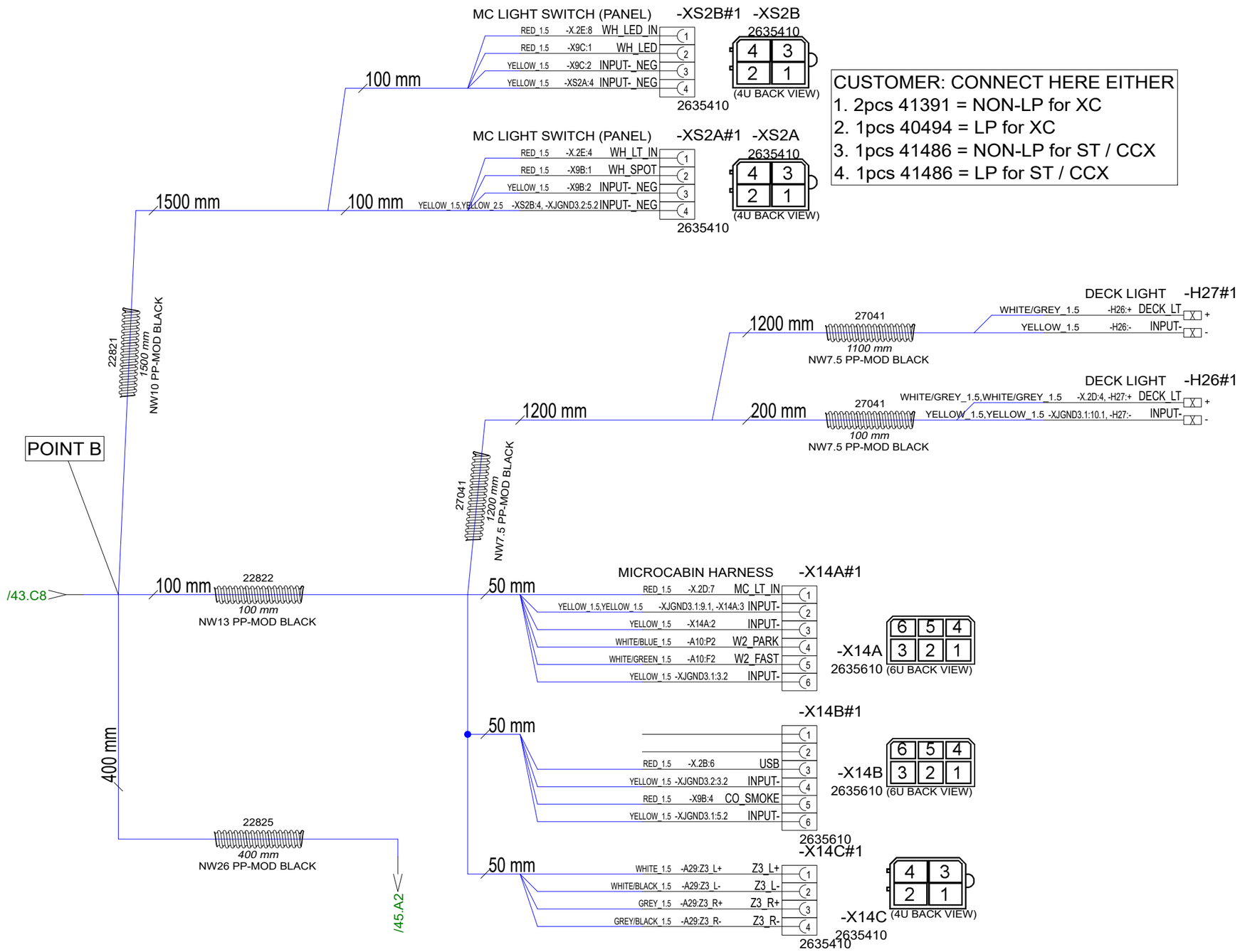

30.4.2024	PF	C4: 2005089; Light pack, branch and length changes	Date	24.4.2023	NAVIX	Axopar		39924	2004468
8.8.2024	PF	C5: 2005089; Night cam, length changes	Drawing by	PF		Boat	Sub-product code	Product code	Project ID
7.10.2024	PF	C6: 2005259; A29 Z2, WES, A29/-, C1 added, A7&A7B ->usb	Sheet rev.	6		28 MK3	DECK HARNESS	HL	44 / 106
Date of modification	Modified by	Description	Project rev.	C	Copyright by	Boat model	Title	Loc	Sheet

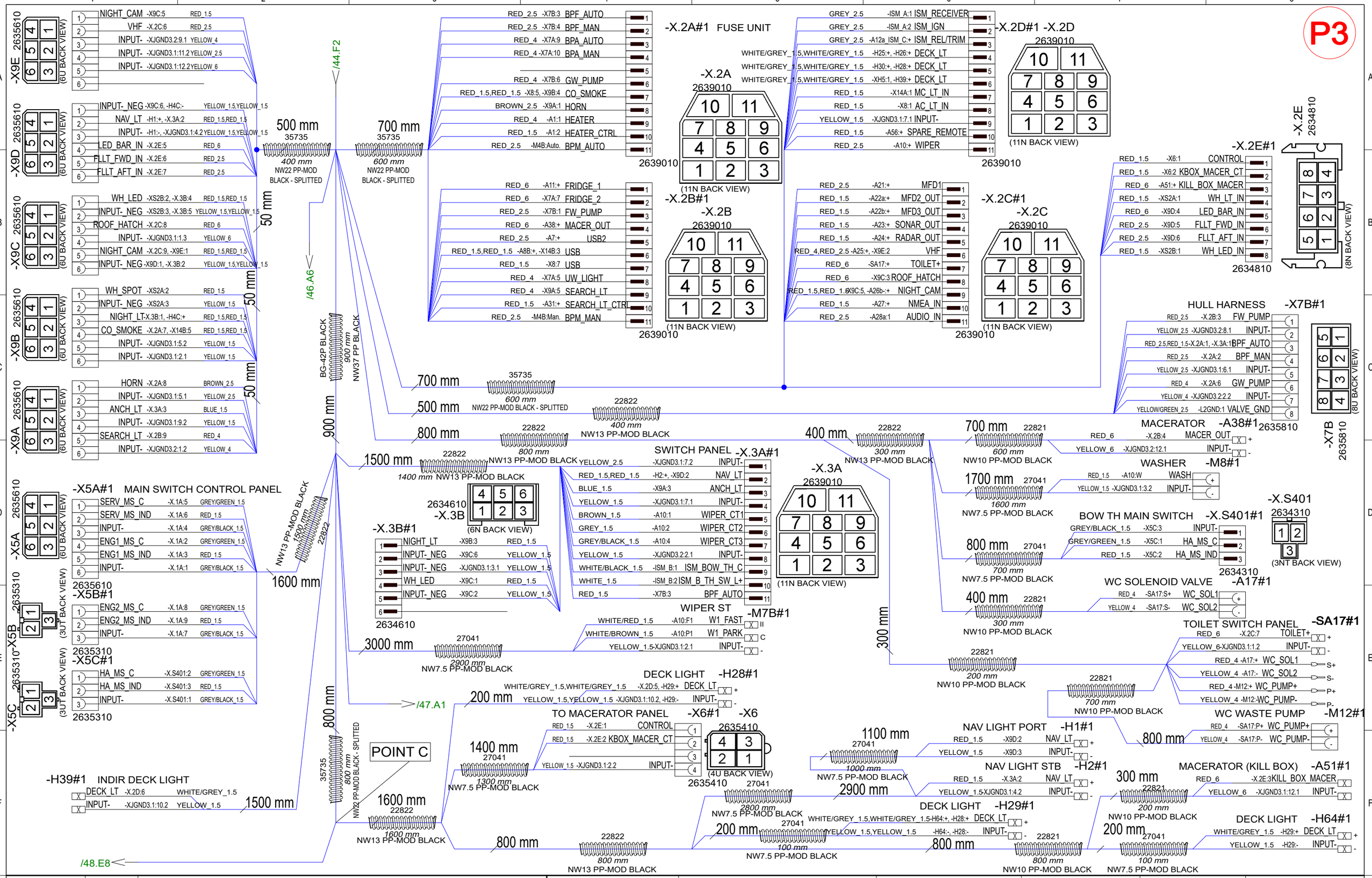

30.4.2024	PF	C4: 2005089; Light pack, branch and length changes	Date 24.4.2023	NAVIX	Axopar		39924 / 2004468
8.8.2024	PF	C5: 2005089; Night cam, length changes	Drawing by PF		Boat	Sub-product code	Product code / Project ID
7.10.2024	PF	C6: 2005259; A29 Z2, WES, A29/-, C1 added, A7&A7B ->usb	Sheet rev. 6		28 MK3	DECK HARNESS	HL
Date of modification	Modified by	Description	Project rev. C	Copyright by	Boat model	Title	Loc / 45 / 106 Sheet

P4

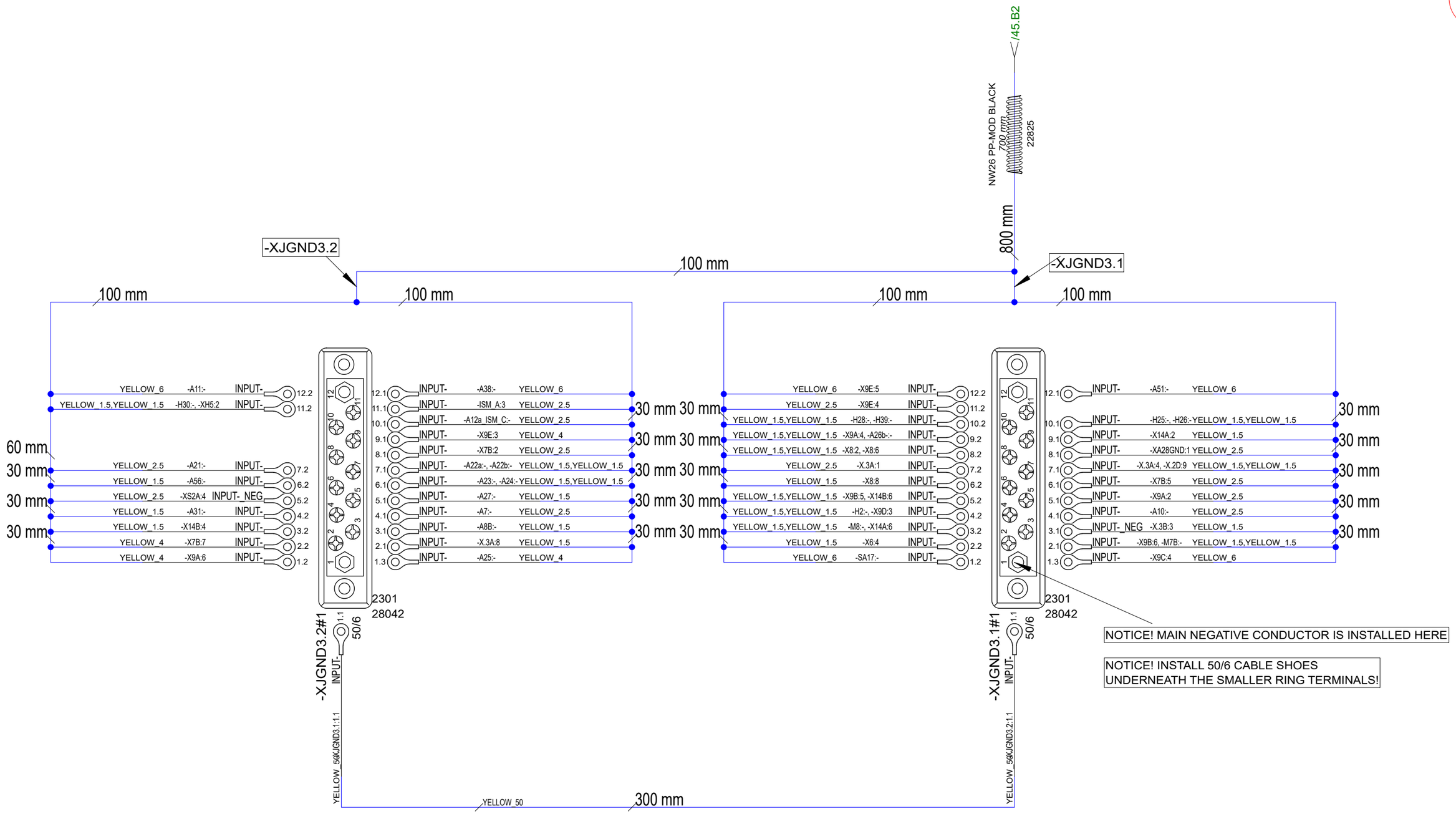

30.4.2024	PF	C4: 2005089; Light pack, branch and length changes	Date	24.4.2023	NAVIX	Axopar		39924	2004468
8.8.2024	PF	C5: 2005089; Night cam, length changes	Drawing by	PF		Boat	Sub-product code	Product code	Project ID
7.10.2024	PF	C6: 2005259; A29 Z2, WES, A29/-, C1 added, A7&A7B ->usb	Sheet rev.	6		28 MK3	DECK HARNESS	HL	46 / 106
Date of modification	Modified by	Description	Project rev.	C	Copyright by	Boat model	Title	Loc	Sheet

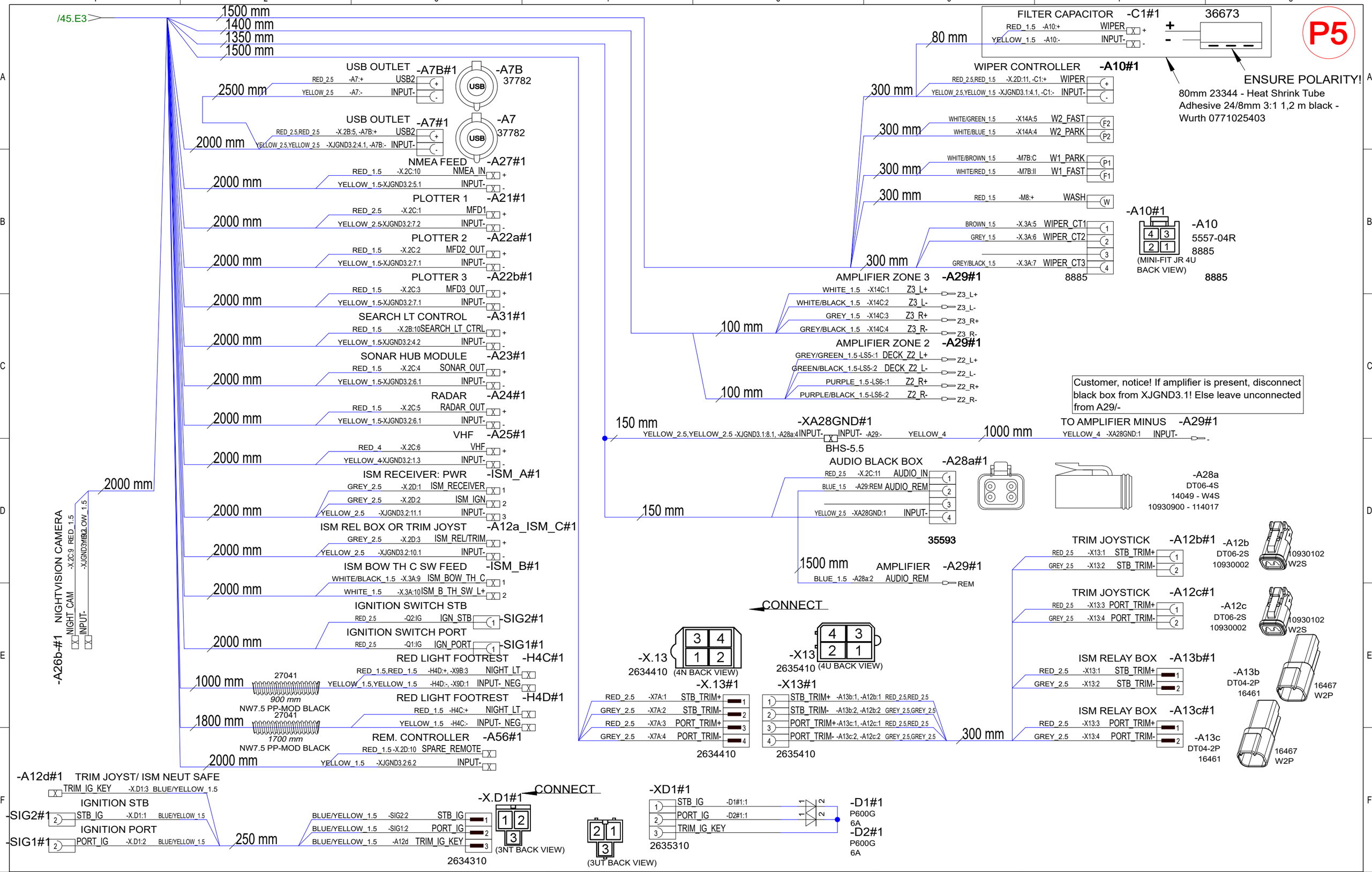

30.4.2024	PF	C4: 2005089; Light pack, branch and length changes	Date 24.5.2024	NAVIX	Axopar	39924	2004468
8.8.2024	PF	C5: 2005089; Night cam, length changes	Drawing by PF		Boat	Sub-product code / Product code	Project ID
7.10.2024	PF	C6: 2005259; A29 Z2, WES, A29/-, C1 added, A7&A7B ->usb	Sheet rev. 6		28 MK3	DECK HARNESS	HL
Date of modification	Modified by	Description	Project rev. C	Copyright by	Boat model	Title	Loc / 47 / 106 Sheet

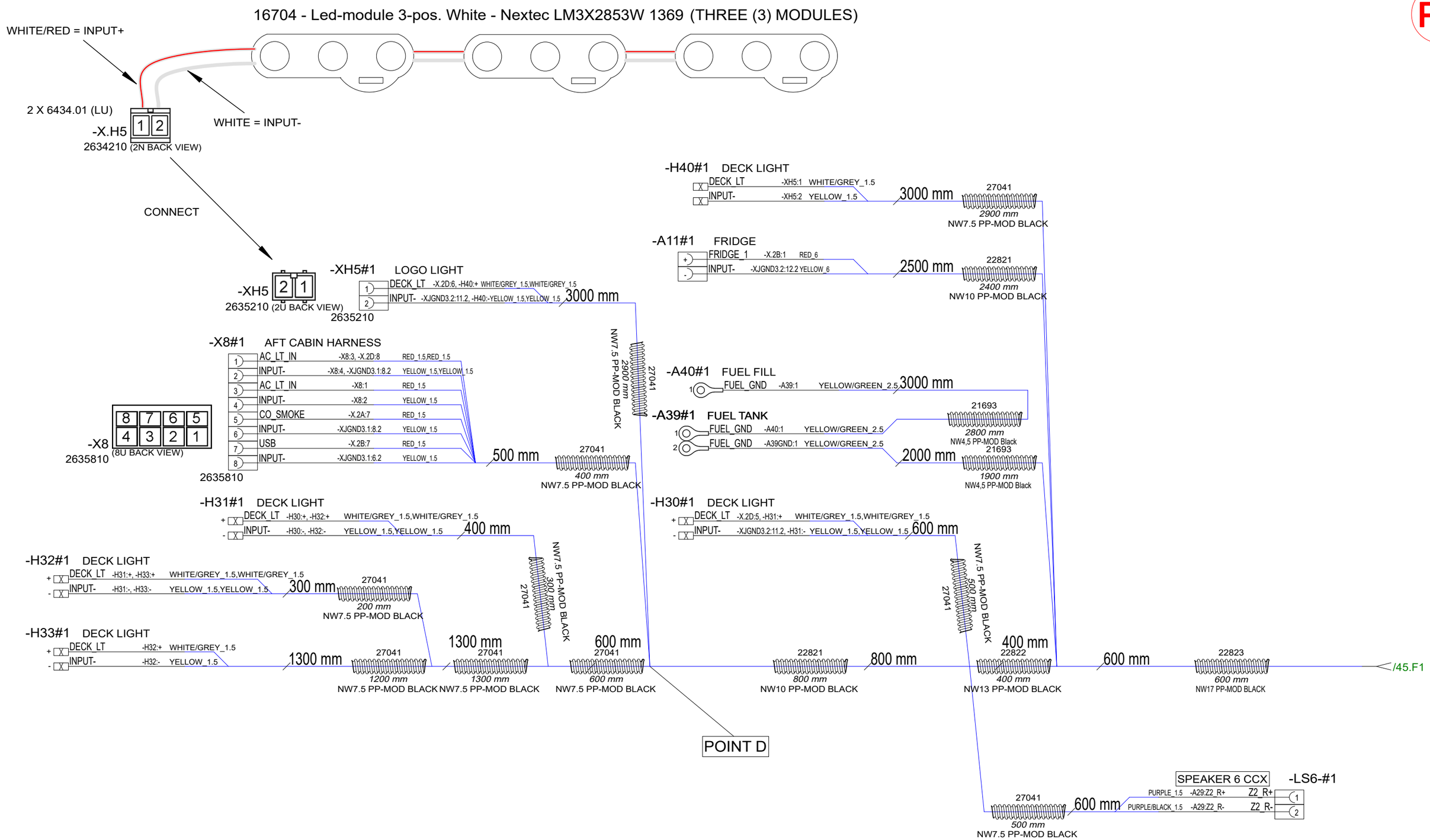

30.4.2024	PF	C4: 2005089; Light pack, branch and length changes	Date	24.4.2023	NAVIX	Axopar		39924	2004468
8.8.2024	PF	C5: 2005089; Night cam, length changes	Drawing by	PF		Boat	Sub-product code	Product code	Project ID
7.10.2024	PF	C6: 2005259; A29 Z2, WES, A29/-, C1 added, A7&A7B ->usb	Sheet rev.	6		28 MK3	DECK HARNESS	HL	48 / 106
Date of modification	Modified by	Description	Project rev.	C	Copyright by	Boat model	Title	Loc	Sheet

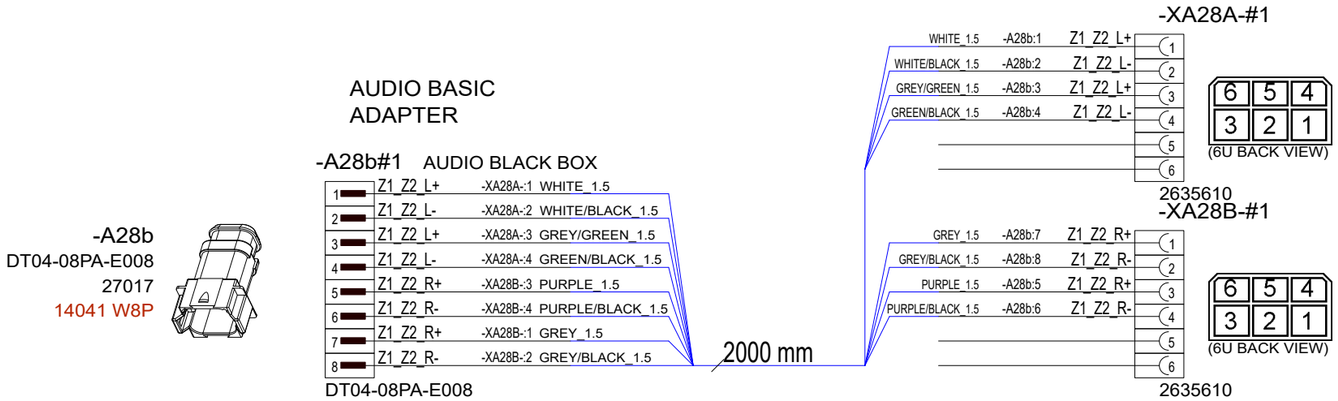

29.5.2024	PF	C1: 2005089; New product	Date	29.5.2024	NAVIX	Axopar		41638	2004468
			Drawing by	PF		Boat	Sub-product code	Product code	Project ID
			Sheet rev.	1		28 MK3	AUDIO BASIC ADAPTER	HL	49 / 106
Date of modification	Modified by	Description	Project rev.	C	Copyright by	Boat model	Title	Loc	Sheet

Customer note: This harness is only installed when 42474 IS installed AND 41387 IS NOT

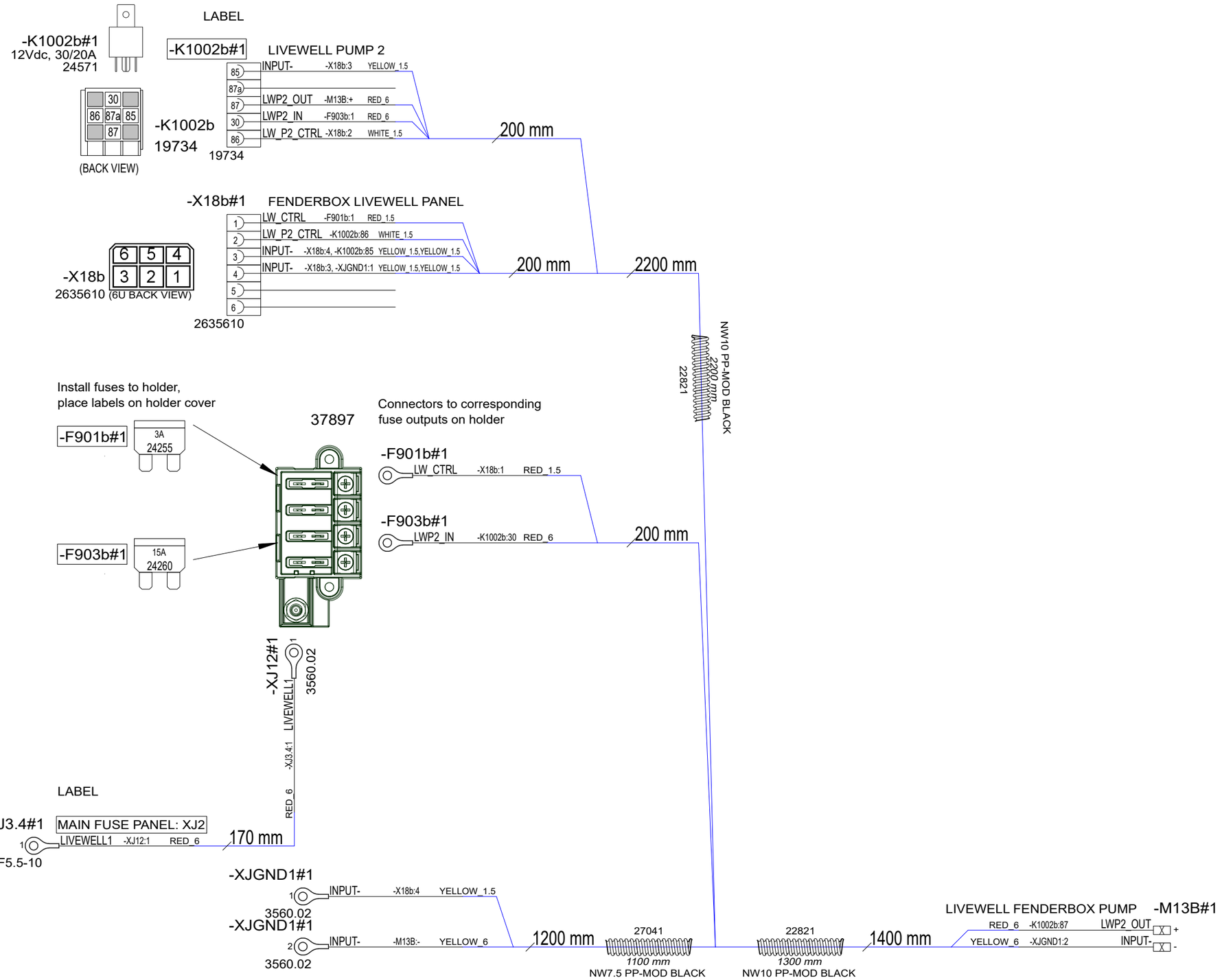

14.10.2024	PF	C1: 2005259; New drawing	Date	14.10.2024	NAVIX	Axopar		42475	2004468
			Drawing by	PF		Boat	Sub-product code	Product code	Project ID
			Sheet rev.	1		28 MK3	CCX LIVEWELL HARNESS FENDERBOX	HL	50 / 106
Date of modification	Modified by	Description	Project rev.	C	Copyright by	Boat model	Title	Loc	Sheet

NOTICE! CABLES WITH STICKER

FOR EXAMPLE

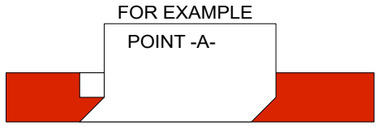

NOTICE!
BATTERY CABLES NEED MARKINGS
SHOWN IN EXAMPLE BELOW. PRINTED EVERY 120mm.

EXEMPTION:
ALL BLACK WIRES
THIS MARKING IS NOT NEEDED.

EXAMPLE: RED 50mm2 WIRE MARKINGS.
MARKING SHOWN ABOVE ONLY TO CABLES LISTED BELOW.

LOOK FOR EQUIVALENT AWG SIZE FOR mm2
AND ADD THIS TO CABLE MARKINGS.
FOR EXAMPLE:
CABLE SIZE IS 70mm2 --> MARKING AWG2/0.

EQUIVALENCY:

mm2		AWG
50 mm2	=	AWG0
70 mm2	=	AWG2/0
95 mm2	=	AWG3/0
120 mm2	=	250 kcmil

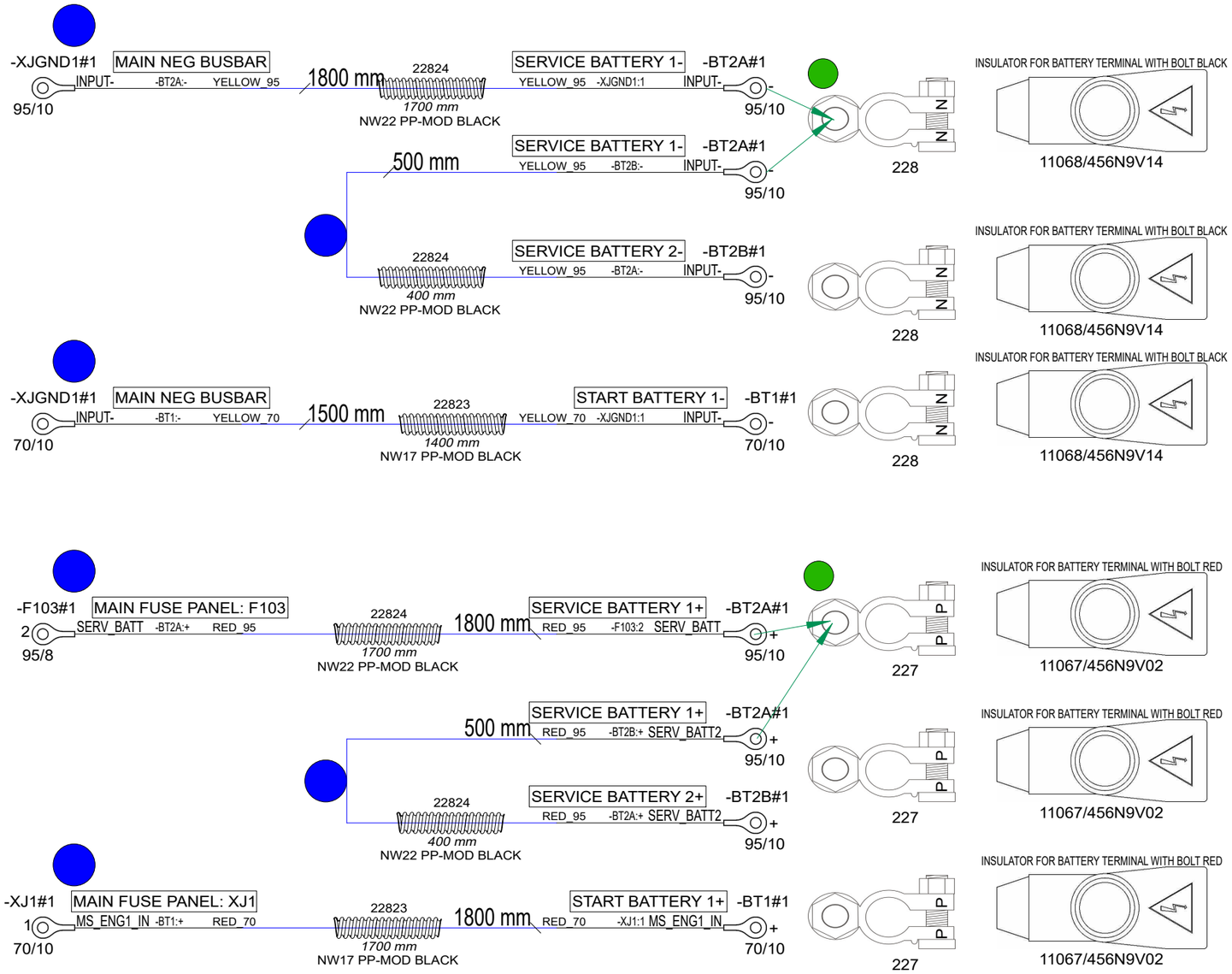

1. An opening about two centimeters wide is cut in the back wall of the insulator.
2. The insulator is installed only on the upper cable and is moved into place.
3. The position of the insulator is fixed above the beginning of the cable lugs with a cable tie around both cables.

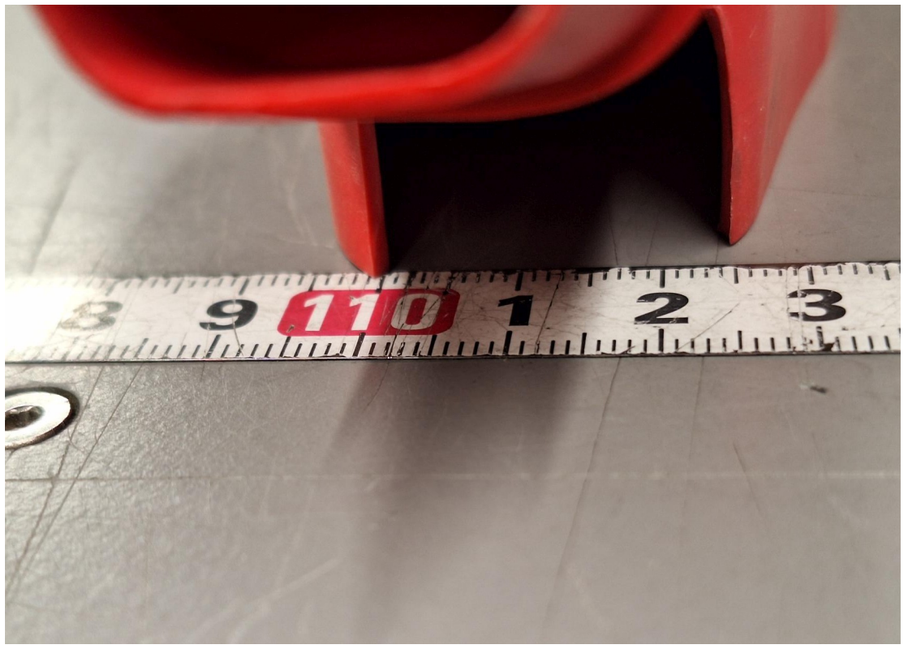

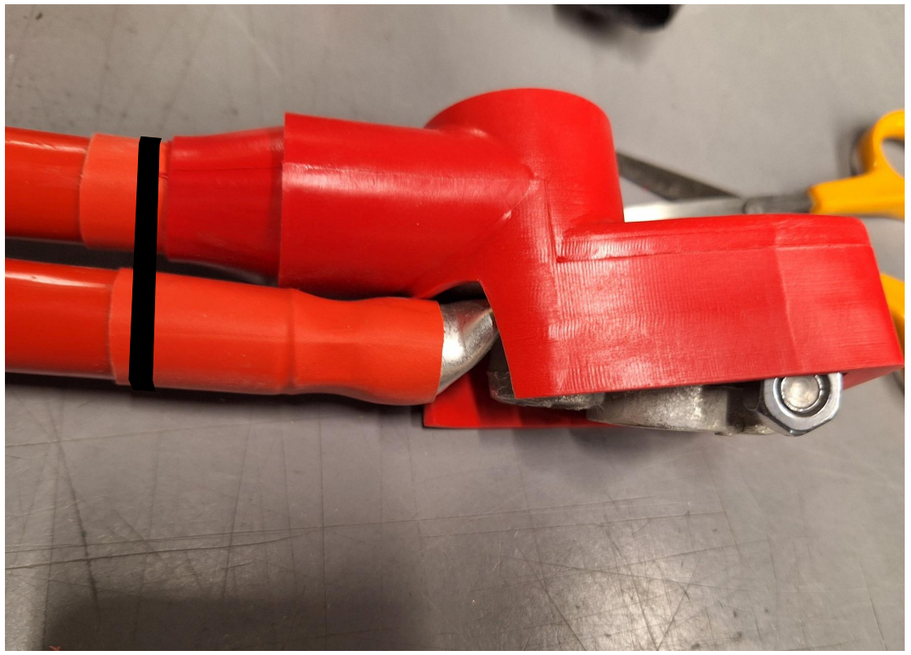

28.9.2023	PF	2004800; labels	Date 20.3.2023	NAVIX	Axopar		38677 / 2004468
26.2.2024	PF	B2: 2004979; port alt cable added, start minus +800mm	Drawing by PF		Boat	Sub-product code	Product code / Project ID
14.5.2024	PF	C3: 2005089; Added battery terminals, Fuse unit supply cable lengths	Sheet rev. 3		28 MK3	BATTERY CABLES	HL
Date of modification	Modified by	Description	Project rev. C	Copyright by	Boat model	Title	Loc / 51/ 106 Sheet

NOTICE! CABLES WITH STICKER

FOR EXAMPLE

POINT -A-

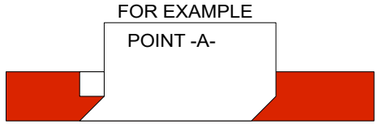

NOTICE!
BATTERY CABLES NEED MARKINGS
SHOWN IN EXAMPLE BELOW. PRINTED EVERY 120mm.

EXEMPTION:
ALL BLACK WIRES
THIS MARKING IS NOT NEEDED.

MARKING

RK90/115 750Vac/ 1000Vdc AWG0 GR90/115 C

CABLE

EXAMPLE: RED 50mm2 WIRE MARKINGS.
MARKING SHOWN ABOVE ONLY TO CABLES LISTED BELOW.

LOOK FOR EQUIVALENT AWG SIZE FOR mm2
AND ADD THIS TO CABLE MARKINGS.
FOR EXAMPLE:
CABLE SIZE IS 70mm2 --> MARKING AWG2/0.

EQUIVALENCY:

mm2		AWG
50 mm2	=	AWG0
70 mm2	=	AWG2/0
95 mm2	=	AWG3/0
120 mm2	=	250 kcmil

NOTICE!
BATTERY CABLES NEED MARKINGS
SHOWN IN EXAMPLE BELOW. PRINTED EVERY 120mm.

EXEMPTION:
ALL BLACK WIRES
THIS MARKING IS NOT NEEDED.

MARKING

R2 ISO 6722 100V AWG6 +100 C

CABLE

EXAMPLE: RED 16mm2 WIRE MARKINGS.
MARKING SHOWN ABOVE ONLY TO CABLES LISTED BELOW.

LOOK FOR EQUIVALENT AWG SIZE FOR mm2
AND ADD THIS TO CABLE MARKINGS.
FOR EXAMPLE:
CABLE SIZE IS 25mm2 --> MARKING AWG3.

EQUIVALENCY:

mm2		AWG
10 mm2	=	AWG8
16 mm2	=	AWG6
25 mm2	=	AWG3
35 mm2	=	AWG2

LABEL:
-Q1

INCLUDED:
38826

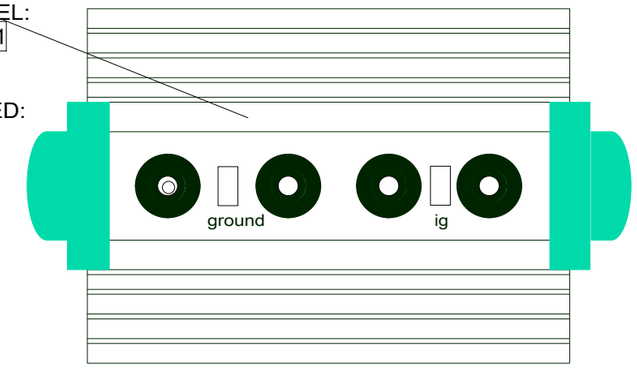

-XJGND1#1 MAIN NEG BUSBAR INPUT- -XJM1:- YELLOW_70 3000 mm ENGINE 1 JUNCT BOX XJM1 -XJM1#1 YELLOW_70 -XJGND1:1 INPUT- -
70/10 70/8

-XJM1#1 ENGINE 1 JUNCT BOX XJM1 MS_ENG1_OUT -F114:1 RED_70 2800 mm MAIN FUSE PANEL: F114 -F114#1 RED_70 -XJM1:+ MS_ENG1_OUT 1
70/8 70/10

INCLUDED: V2500

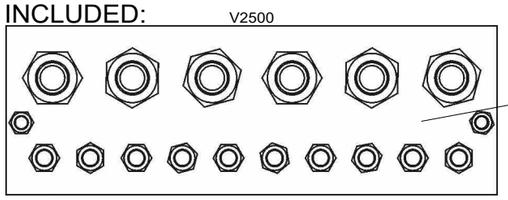

LABEL:
-XJGND1

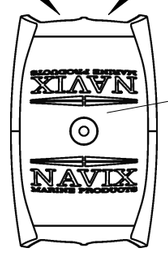

LABEL:
-XJM1#1

V4100

-G1#1 ENG 1 GENERATOR: OUT ALT_IN_PORT -Q1:IN RED_50 5000 mm PORT ISOLATOR: IN -Q1#1 RED_50 -G1:OUT ALT_IN_PORT IN
OUT 50/8 50/8

-Q1#1 PORT ISOLATOR: 2-OUT ALT1_PORT -F111:2 RED_35 1300 mm MAIN FUSE PANEL: F111 -F111#1 RED_35 -Q1:2-OUT ALT1_PORT 2
2-OUT 35/8 35/8

-Q1#1 PORT ISOLATOR: 3-OUT ALT2_PORT -F102:2 RED_35 1300 mm MAIN FUSE PANEL: F102 -F102#1 RED_35 -Q1:3-OUT ALT2_PORT 2
3-OUT 35/8 35/8

-F101#1 MAIN FUSE PANEL: F101 DIRECT+ -XJ5:1 RED_16 5000 mm FUSE UNIT: XJ5 -XJ5#1 RED_16 -F101:2 DIRECT+ 1
2 16/8 16/10

-F106#1 MAIN FUSE PANEL: F106 INPUT+ -XJ6:1 RED_50 5000 mm FUSE UNIT: XJ6 -XJ6#1 RED_50 -F106:2 INPUT+ 1
2 50/8 50/6

-XJGND1#1 MAIN NEG BUSBAR INPUT- -Q1:GND YELLOW_2.5 1000 mm PORT ISOLATOR: GND -Q1#1 YELLOW_2.5 -XJGND1:1 INPUT- GND
3560.02 RSB 7901

-XJGND1#1 MAIN NEG BUSBAR INPUT- -XJGND3.1:1 YELLOW_50 5000 mm CONSOLE NEG BUSBAR -XJGND3.1#1 YELLOW_50 -XJGND1:1 INPUT- 1
50/10 50/6

28.9.2023	PF	2004800; labels	Date	29.8.2024	NAVIX	Axopar		38677	2004468
26.2.2024	PF	B2: 2004979; port alt cable added, start minus +800mm	Drawing by	PF		Boat	Sub-product code	Product code	Project ID
14.5.2024	PF	C3: 2005089; Added battery terminals, Fuse unit supply cable lengths	Sheet rev.	3		28 MK3	BATTERY CABLES	HL	52 / 106
Date of modification	Modified by	Description	Project rev.	C	Copyright by	Boat model	Title	Loc	Sheet

NOTICE! CABLES WITH STICKER

FOR EXAMPLE

POINT -A-

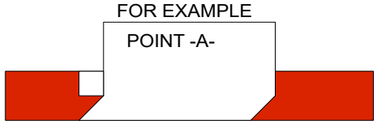

NOTICE!
BATTERY CABLES NEED MARKINGS
SHOWN IN EXAMPLE BELOW. PRINTED EVERY 120mm.

EXEMPTION:
ALL BLACK WIRES
THIS MARKING IS NOT NEEDED.

EXAMPLE: RED 50mm2 WIRE MARKINGS.
MARKING SHOWN ABOVE ONLY TO CABLES LISTED BELOW.

LOOK FOR EQUIVALENT AWG SIZE FOR mm2
AND ADD THIS TO CABLE MARKINGS.
FOR EXAMPLE:
CABLE SIZE IS 70mm2 --> MARKING AWG2/0.

EQUIVALENCY:

mm2		AWG
50 mm2	=	AWG0
70 mm2	=	AWG2/0
95 mm2	=	AWG3/0
120 mm2	=	250 kcmil

1. An opening about two centimeters wide is cut in the back wall of the insulator.
2. The insulator is installed only on the upper cable and is moved into place.
3. The position of the insulator is fixed above the beginning of the cable lugs with a cable tie around both cables.

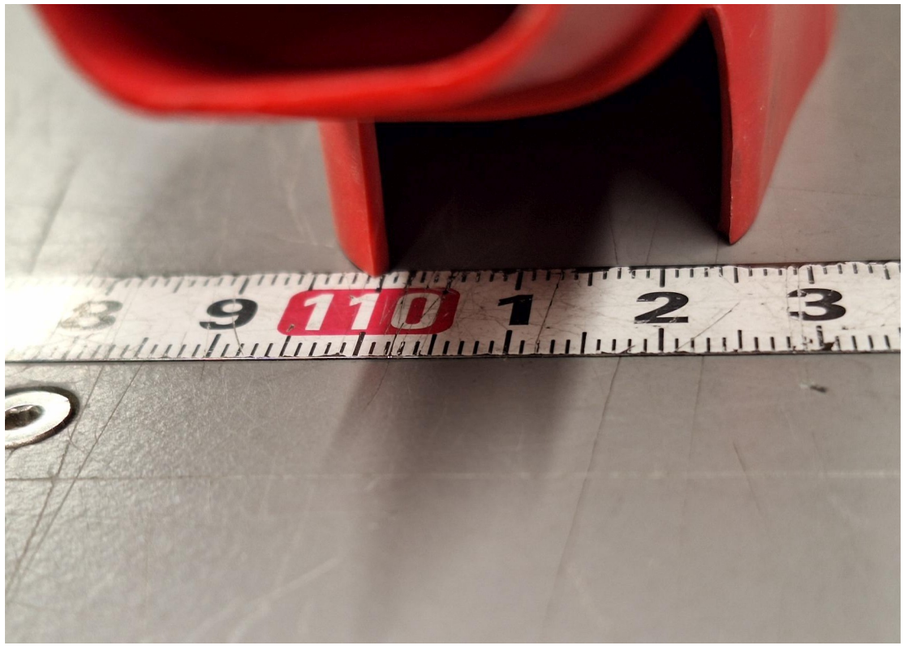

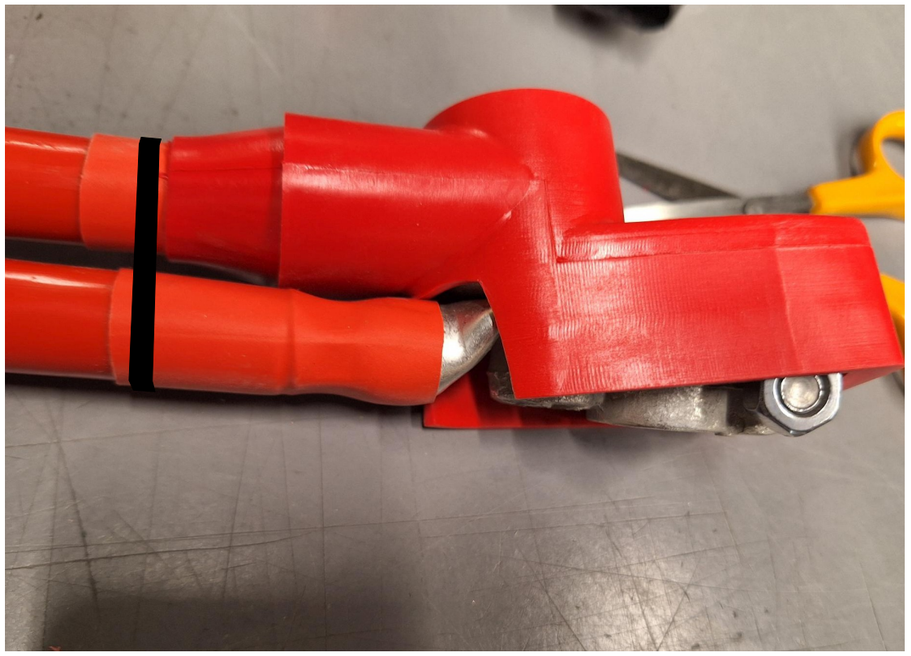

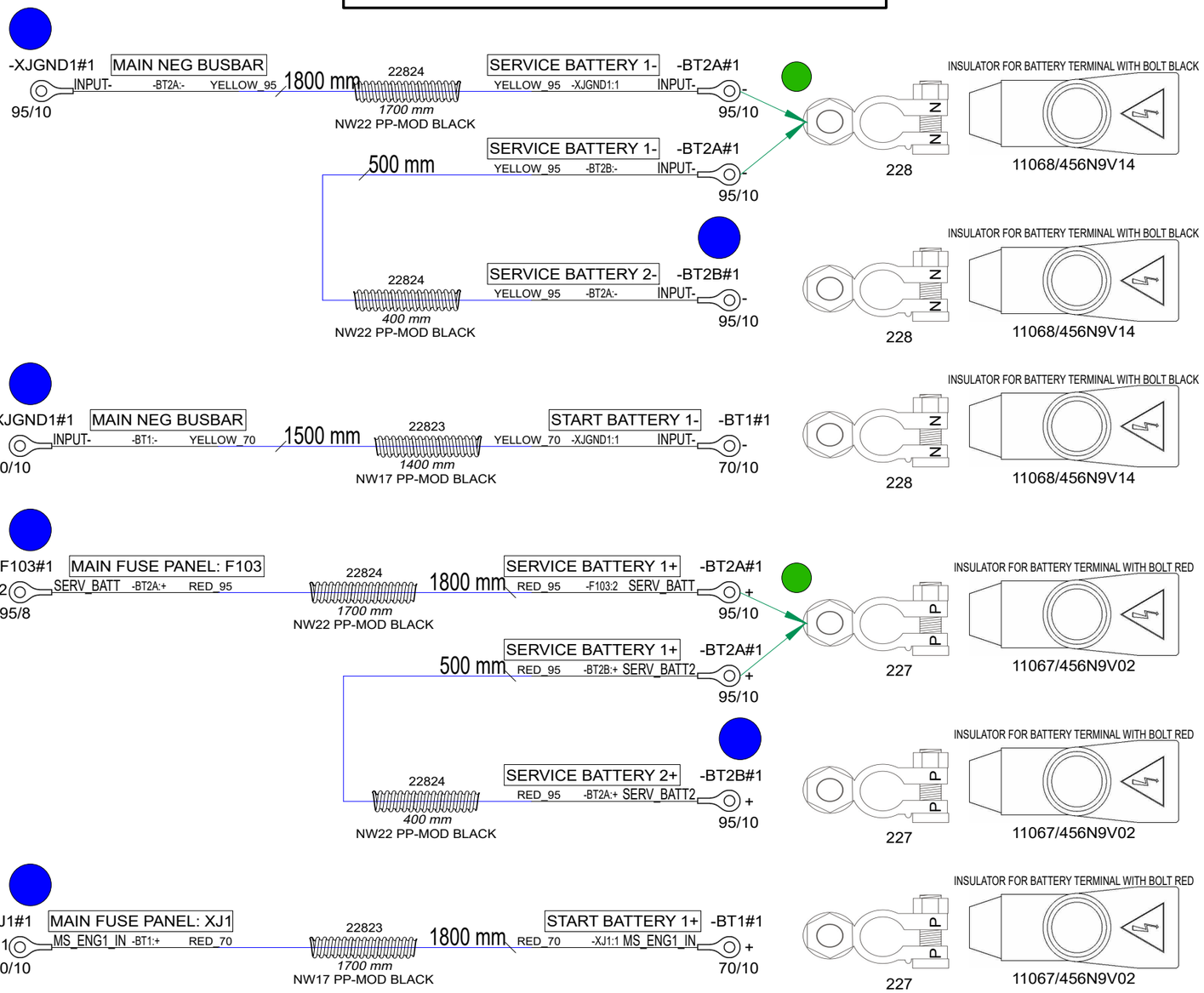

9.8.2024	PF	C4: 2005089; G1-Q1: +300mm	Date	28.9.2023	Axopar		39911 / 2004468
26.2.2024	PF	B2: 2004979; alt cable length +1m, start minus +800mm	Drawing by	PF	Boat	Sub-product code	Product code / Project ID
14.5.2024	PF	C3: 2005089; Added battery terminals, Fuse unit supply cable lengths	Sheet rev.	4	28 MK3	BATTERY CABLES V10	HL
Date of modification	Modified by	Description	Project rev.	C	Boat model	Title	Loc / 53 / 106 Sheet

NAVIX

Copyright by

NOTICE! CABLES WITH STICKER

FOR EXAMPLE

POINT -A-

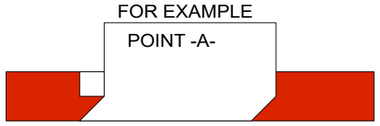

NOTICE!
BATTERY CABLES NEED MARKINGS
SHOWN IN EXAMPLE BELOW. PRINTED EVERY 120mm.

EXEMPTION:
ALL BLACK WIRES
THIS MARKING IS NOT NEEDED.

MARKING

RK90/115 750Vac/ 1000Vdc AWG0 GR90/115 C

CABLE

EXAMPLE: RED 50mm2 WIRE MARKINGS.
MARKING SHOWN ABOVE ONLY TO CABLES LISTED BELOW.

LOOK FOR EQUIVALENT AWG SIZE FOR mm2
AND ADD THIS TO CABLE MARKINGS.
FOR EXAMPLE:
CABLE SIZE IS 70mm2 --> MARKING AWG2/0.

EQUIVALENCY:

mm2		AWG
50 mm2	=	AWG0
70 mm2	=	AWG2/0
95 mm2	=	AWG3/0
120 mm2	=	250 kcmil

NOTICE!
BATTERY CABLES NEED MARKINGS
SHOWN IN EXAMPLE BELOW. PRINTED EVERY 120mm.

EXEMPTION:
ALL BLACK WIRES
THIS MARKING IS NOT NEEDED.

MARKING

R2 ISO 6722 100V AWG6 +100 C

CABLE

EXAMPLE: RED 16mm2 WIRE MARKINGS.
MARKING SHOWN ABOVE ONLY TO CABLES LISTED BELOW.

LOOK FOR EQUIVALENT AWG SIZE FOR mm2
AND ADD THIS TO CABLE MARKINGS.
FOR EXAMPLE:
CABLE SIZE IS 25mm2 --> MARKING AWG3.

EQUIVALENCY:

mm2		AWG
10 mm2	=	AWG8
16 mm2	=	AWG6
25 mm2	=	AWG3
35 mm2	=	AWG2

LABEL:
-Q1

INCLUDED:
38826

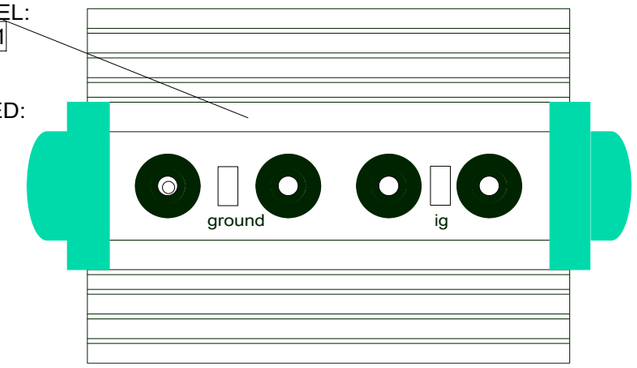

-XJGND1#1 MAIN NEG BUSBAR INPUT- -XJM1:- YELLOW_70 3000 mm ENGINE 1 JUNCT BOX XJM1 -XJM1#1 YELLOW_70 -XJGND1:1 INPUT- -
70/10 70/8

-XJM1#1 ENGINE 1 JUNCT BOX XJM1 2800 mm MAIN FUSE PANEL: F114 -F114#1
+ MS_ENG1_OUT -F114:1 RED_70 RED_70 -XJM1:MS_ENG1_OUT 1
70/8 70/10

INCLUDED: V2500

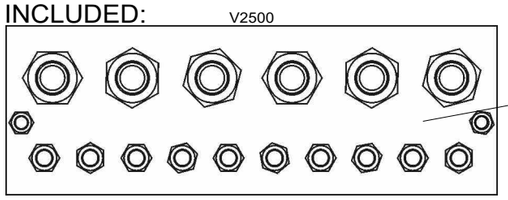

LABEL:
-XJGND1

LABEL:
-XJM1#1

V4100

Customer replaces F102 and F111 with 150A fuses in 38684 MAIN FUSE PANEL when V10 option is selected

INCLUDED

-F102#1 IGN PROT FUSE ANL 150A 150A
13633

-F111#1 IGN PROT FUSE ANL 150A 150A
13633

-G1#1 ENG 1 GENERATOR: OUT
OUT ALT_IN_PORT -Q1:IN RED_70 5300 mm RED_70 -G1:OUT ALT_IN_PORT PORTISOLATOR:IN -Q1#1 IN
70/8 70/8

-Q1#1 PORT ISOLATOR: 2-OUT
2-OUT ALT1_PORT -F111:2 RED_70 1300 mm RED_70 -Q1:2-OUT ALT1_PORT MAIN FUSE PANEL: F111 -F111#1
70/8 70/8 2

-Q1#1 PORT ISOLATOR: 3-OUT
3-OUT ALT2_PORT -F102:2 RED_70 1300 mm RED_70 -Q1:3-OUT ALT2_PORT MAIN FUSE PANEL: F102 -F102#1
70/8 70/8 2

-F101#1 MAIN FUSE PANEL: F101
2 DIRECT+ -XJ5:1 RED_16 5000 mm RED_16 -F101:2 DIRECT+ FUSE UNIT: XJ5 -XJ5#1
16/8 1 16/10

-F106#1 MAIN FUSE PANEL: F106
2 INPUT+ -XJ6:1 RED_50 5000 mm RED_50 -F106:2 INPUT+ FUSE UNIT: XJ6 -XJ6#1
50/8 1 50/6

-XJGND1#1 MAIN NEG BUSBAR
INPUT- -Q1:GND YELLOW_2.5 1000 mm YELLOW_2.5 -XJGND1:1 INPUT- PORT ISOLATOR: GND -Q1#1 GND
3560.02 RSB 7901

-XJGND1#1 MAIN NEG BUSBAR
INPUT- -XJGND3.1:1 YELLOW_50 5000 mm YELLOW_50 -XJGND1:1 INPUT- CONSOLE NEG BUSBAR -XJGND3.1#1
50/10 1 50/6

9.8.2024	PF	C4: 2005089; G1-Q1: +300mm	Date	29.8.2024	NAVIX	Axopar		39911	2004468
26.2.2024	PF	B2: 2004979; alt cable length +1m, start minus +800mm	Drawing by	PF		Boat	Sub-product code	Product code	Project ID
14.5.2024	PF	C3: 2005089; Added battery terminals, Fuse unit supply cable lengths	Sheet rev.	4		28 MK3	BATTERY CABLES V10	HL	54 / 106
Date of modification	Modified by	Description	Project rev.	C	Copyright by	Boat model	Title	Loc	Sheet

NOTICE! CABLES WITH STICKER

FOR EXAMPLE

POINT -A-

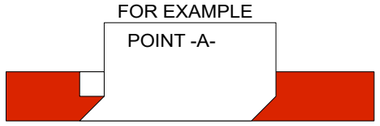

NOTICE!
BATTERY CABLES NEED MARKINGS
SHOWN IN EXAMPLE BELOW. PRINTED EVERY 120mm.

EXEMPTION:
ALL BLACK WIRES
THIS MARKING IS NOT NEEDED.

MARKING

RK90/115 750Vac/ 1000Vdc AWG0 GR90/115 C

CABLE

EXAMPLE: RED 50mm2 WIRE MARKINGS.
MARKING SHOWN ABOVE ONLY TO CABLES LISTED BELOW.

LOOK FOR EQUIVALENT AWG SIZE FOR mm2
AND ADD THIS TO CABLE MARKINGS.
FOR EXAMPLE:
CABLE SIZE IS 70mm2 --> MARKING AWG2/0.

EQUIVALENCY:

mm2		AWG
50 mm2	=	AWG0
70 mm2	=	AWG2/0
95 mm2	=	AWG3/0
120 mm2	=	250 kcmil

NOTICE!
BATTERY CABLES NEED MARKINGS
SHOWN IN EXAMPLE BELOW. PRINTED EVERY 120mm.

EXEMPTION:
ALL BLACK WIRES
THIS MARKING IS NOT NEEDED.

MARKING

R2 ISO 6722 100V AWG6 +100 C

CABLE

EXAMPLE: RED 16mm2 WIRE MARKINGS.
MARKING SHOWN ABOVE ONLY TO CABLES LISTED BELOW.

LOOK FOR EQUIVALENT AWG SIZE FOR mm2
AND ADD THIS TO CABLE MARKINGS.
FOR EXAMPLE:
CABLE SIZE IS 25mm2 --> MARKING AWG3.

EQUIVALENCY:

mm2		AWG
10 mm2	=	AWG8
16 mm2	=	AWG6
25 mm2	=	AWG3
35 mm2	=	AWG2

LABEL:
-Q2

INCLUDED:
38826

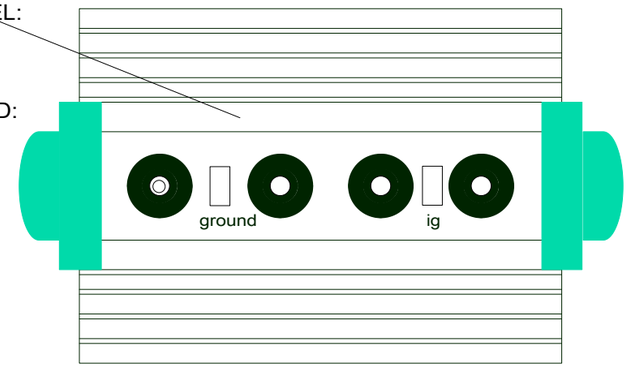

Install in indicated locations. Altogether 1 pcs each.

INSULATOR FOR BATTERY TERMINAL WITH BOLT RED

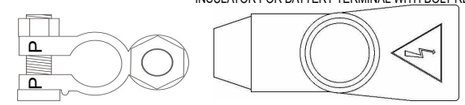

227 11067/456N9V02

INSULATOR FOR BATTERY TERMINAL WITH BOLT BLACK

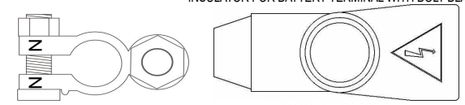

228 11068/456N9V14

-XJGND1#1 (70/10) — INPUT- — MAIN NEG BUSBAR — -BT3:- YELLOW_70 — 1800 mm — 22823 1700 mm NW17 PP-MOD BLACK — YELLOW_70 -XJGND1:1 — START BATTERY 2- INPUT- — -BT3#1 (70/10)

-BT3#1 (70/10) — MS_ENG2_IN -XJ4:1 RED_70 — START BATTERY 2+ — 1800 mm — 22823 1700 mm NW17 PP-MOD BLACK — RED_70 -BT3:+ MS_ENG2_IN — MAIN FUSE PANEL: XJ4 — -XJ4#1 1 (70/10)

-XJGND1#1 (70/10) — INPUT- — MAIN NEG BUSBAR — -XJM2:- YELLOW_70 — 3400 mm — YELLOW_70 -XJGND1:1 — ENGINE 1 JUNCT BOX XJM2 INPUT- — -XJM2#1 (70/8)

-XJM2#1 (70/8) — MS_ENG2_OUT -F115:1 RED_70 — ENGINE 1 JUNCT BOX XJM2 — 2800 mm — RED_70 -XJM2:MS_ENG2_OUT — MAIN FUSE PANEL: F115 — -F115#1 1 (70/10)

LABEL:
-XJM2#1

V4100

-G2#1 OUT (50/8) — ALT_IN_STB -Q2:IN RED_50 — 5000 mm — RED_50 -G2:OUT ALT_IN_STB — STB ISOLATOR: IN — -Q2#1 IN (50/8)

-Q2#1 2-OUT (35/8) — ALT1_STB -F112:2 RED_35 — 1300 mm — RED_35 -Q2:2-OUT ALT1_STB — MAIN FUSE PANEL: F112 — -F112#1 2 (35/8)

-Q2#1 3-OUT (35/8) — ALT2_STB -F104:2 RED_35 — 1300 mm — RED_35 -Q2:3-OUT ALT2_STB — MAIN FUSE PANEL: F104 — -F104#1 2 (35/8)

-XJGND1#1 (3560.02) — INPUT- — MAIN NEG BUSBAR — -Q2:GND YELLOW_2.5 — 2000 mm — YELLOW_2.5 -XJGND1:1 INPUT- — STB ISOLATOR: GND — -Q2#1 GND RSB 7901

CUSTOMER INSTALLS TO
38687 MAIN SWITCH CONTROL PANEL

-S503
35858 -S503#1 STB ENGINE MAIN SWITCH

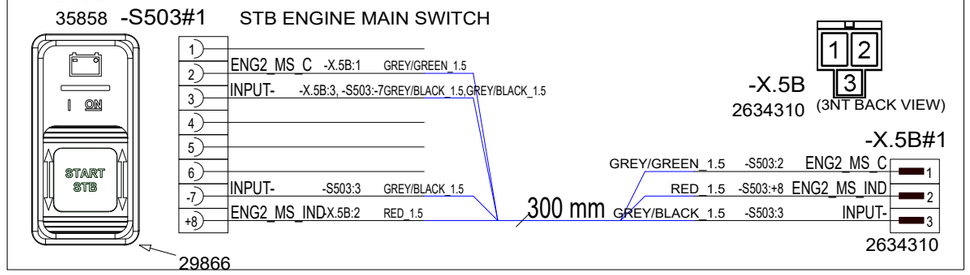

Date of modification	Modified by	Description
28.9.2023	PF	A2: 2004800;Added XJ4 busbar+screws, 90000->90001, labels., lengths
12.2.2024	PF	B3: 2004979; start cable lengths, port alt cable removed
14.5.2024	PF	C4: 2005089; Added battery terminals

Date	20.3.2023
Drawing by	PF
Sheet rev.	4
Project rev.	C

NAVIX
Copyright by

Axopar Boat		38678 Product code	2004468 Project ID
28 MK3 Boat model	DUAL ENGINE BATTERY CABLES Title	HL Loc	55 / 106 Sheet

(DRAWING FOR CUSTOMER REFERENCE)

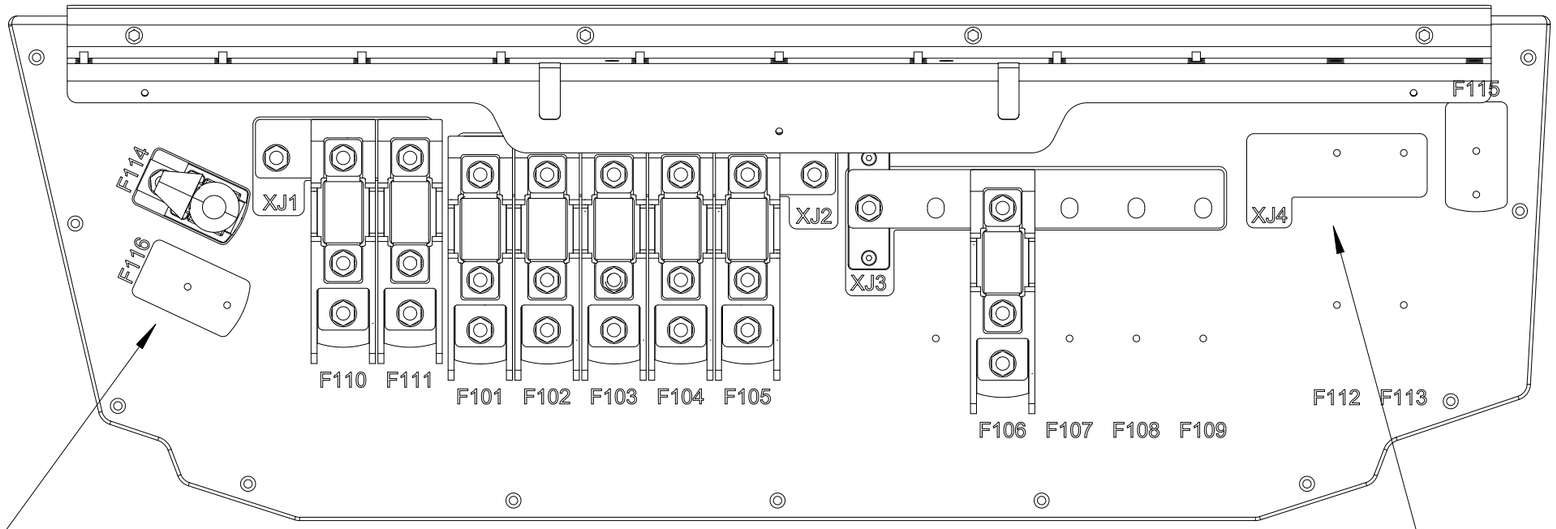

INCLUDED, PACK SEPARATELY
CUSTOMER INSTALLS TO MAIN FUSE UNIT (F115 AND F116)

1. 2pc 34642 CFBAR1-250SP SINGLE STUD

2pc VMI32012 HEX NUT M8 DIN934
2pc VMI32013 FLAT WASHER FOR HEX BOLT
2pc VMI32011 SPRING LOCK WASHER M8 DIN127
2pc 34641 -B.6 CFCOVER-1R SINGLE STUD/RED
2pc 34640 -PS_F.6 CUBE FUSE MRFB-080 80A

-F115#1
34640

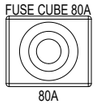

2. 2pc VMI32012 HEX NUT M8 DIN934
2pc VMI32013 FLAT WASHER FOR HEX BOLT
2pc VMI32011 SPRING LOCK WASHER M8 DIN127

-F116#1
34640

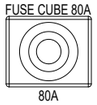

3. 6pcs VMI30917 COUNTERSUNK HEAD SCREW HEX SOCKET M4X16 DIN7991

4. 2pc VMI32019 - HEX Bolt Full thread M8X30 DIN933

5. 2pc 39047_NAVIX_LINE_CUBE_FUSE_HOLDER_SINGLE

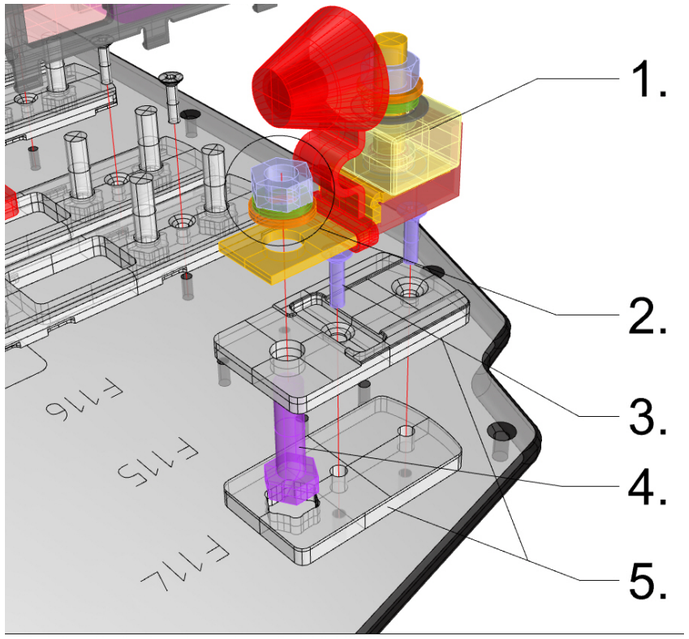

INCLUDED, PACK SEPARATELY
CUSTOMER INSTALLS TO MAIN FUSE UNIT (XJ4, F112 AND F113)

1pc 39057_NAVIX_LINE_BUS_BAR_TYPE5C_3X
1pc VMI32012 HEX NUT M8 DIN934
1pc VMI32013 FLAT WASHER FOR HEX BOLT
1pc VMI32011 SPRING LOCK WASHER M8 DIN127
1pc VMI32018 HEX BOLT FULL THREAD M8X25 DIN933

(for attaching holders to panel):
4 pcs VMI30917 COUNTERSUNK HEAD SCREW
HEX SOCKET M4X16 DIN7991

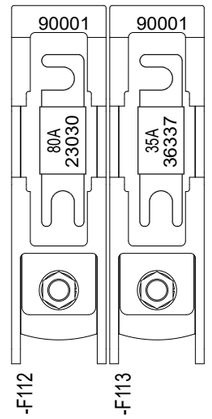

Date of modification	Modified by	Description
28.9.2023	PF	A2: 2004800;Added XJ4 busbar+screws, 90000->90001, labels., lengths
12.2.2024	PF	B3: 2004979; start cable lengths, port alt cable removed
14.5.2024	PF	C4: 2005089; Added battery terminals

Date	19.10.2023
Drawing by	PF
Sheet rev.	4
Project rev.	C

NAVIX
Copyright by

Axopar Boat		38678 Product code	2004468 Project ID
28 MK3 Boat model	DUAL ENGINE BATTERY CABLES Title	HL Loc	56 / 106 Sheet

NOTICE! CABLES WITH STICKER

FOR EXAMPLE

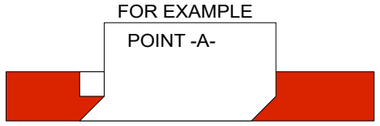

-A32#1	BATTERY CHARGER: 1	CH1	-F110:2	RED_16	1000 mm	RED_16	-A32:1	CH1	MAIN FUSE PANEL: F110	-F110#1
1 / 16/6									2 / 16/8	
-A32#1	BATTERY CHARGER: 2	CH2	-F105:2	RED_16	1000 mm	RED_16	-A32:2	CH2	MAIN FUSE PANEL: F105	-F105#1
2 / 16/6									2 / 16/8	
-A32#1	BATTERY CHARGER: 3	CH3	-F113:2	RED_16	1300 mm	RED_16	-A32:3	CH3	MAIN FUSE PANEL: F113	-F113#1
3 / 16/6									2 / 16/8	
-A32#1	BATTERY CHARGER: GND	INPUT-	-XJGND1:1	YELLOW_16	800 mm	YELLOW_16	-A32:GND	INPUT-	MAIN NEG BUSBAR	-XJGND1#1
GND / 16/6									16/10	
-A32#1	BATTERY CHARGER: PE	CH1_PE	-XJGND1:1	AWG_12_Green	800 mm	AWG_12_Green	-A32:PE	CH1_PE	MAIN NEG BUSBAR	-XJGND1#1
PE / 3560.02									3314.02	

NOTICE!
BATTERY CABLES NEED MARKINGS
SHOWN IN EXAMPLE BELOW. PRINTED EVERY 120mm.

EXEMPTION:
ALL BLACK WIRES
THIS MARKING IS NOT NEEDED.

MARKING

R2 ISO 6722 100V AWG6 +100 C

EXAMPLE: RED 16mm2 WIRE MARKINGS.

CABLE

MARKING SHOWN ABOVE ONLY TO CABLES LISTED BELOW.

LOOK FOR EQUIVALENT AWG SIZE FOR mm2
AND ADD THIS TO CABLE MARKINGS.

FOR EXAMPLE:
CABLE SIZE IS 25mm2 --> MARKING AWG3.

EQUIVALENCY:

mm2		AWG
10 mm2	=	AWG8
16 mm2	=	AWG6
25 mm2	=	AWG3
35 mm2	=	AWG2

Date of modification	Modified by	Description
6.10.2023	PF	2004800; labels
28.5.2024	PF	C1: 2005089; Not modified
17.10.2024	PF	C2: 2005259; Added PE wire

Date	20.3.2023
Drawing by	PF
Sheet rev.	2
Project rev.	C

NAVIX

Copyright by

Axopar			
Boat	Sub-product code	38679 Product code	2004468 Project ID
28 MK3	CHARGER CABLES	HL	57 / 106
Boat model	Title	Loc	Sheet

NOTICE! CABLES WITH STICKER

FOR EXAMPLE

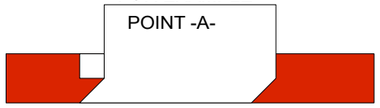

-A32#1 BATTERY CHARGER: 1
1 CH1 -F110:2 RED_16
16/6
1000 mm
MAIN FUSE PANEL: F110 -F110#1
RED_16 -A32:1 CH1 2
16/8

-A32#1 BATTERY CHARGER: 2
2 CH2 -F105:2 RED_16
16/6
1000 mm
MAIN FUSE PANEL: F105 -F105#1
RED_16 -A32:2 CH2 2
16/8

-A32#1 BATTERY CHARGER: GND
GND INPUT- -XJGND1:1 YELLOW_16
16/6
800 mm
MAIN NEG BUSBAR -XJGND1#1
YELLOW_16 -A32:GND INPUT-
16/10

-A32#1 BATTERY CHARGER: PE
PE CH1_PE -XJGND1:1 AWG_12_Green
3560.02
800 mm
MAIN NEG BUSBAR -XJGND1#1
AWG_12_Green -A32:PE CH1_PE
3314.02

NOTICE!
BATTERY CABLES NEED MARKINGS
SHOWN IN EXAMPLE BELOW. PRINTED EVERY 120mm.

EXEMPTION:
ALL BLACK WIRES
THIS MARKING IS NOT NEEDED.

MARKING

R2 ISO 6722 100V AWG6 +100 C

CABLE

EXAMPLE: RED 16mm2 WIRE MARKINGS.

MARKING SHOWN ABOVE ONLY TO CABLES LISTED BELOW.

LOOK FOR EQUIVALENT AWG SIZE FOR mm2
AND ADD THIS TO CABLE MARKINGS.

FOR EXAMPLE:
CABLE SIZE IS 25mm2 --> MARKING AWG3.

EQUIVALENCY:

mm2		AWG
10 mm2	=	AWG8
16 mm2	=	AWG6
25 mm2	=	AWG3
35 mm2	=	AWG2

Date of modification	Modified by	Description
17.10.2024	PF	C2: 2005259; Added PE wire
--	PF	B1: Not modified
28.5.2024	PF	C1: 2005089; Not modified

Date	28.9.2023
Drawing by	PF
Sheet rev.	2
Project rev.	C

NAVIX
Copyright by

Axopar Boat	Sub-product code	39779 Product code	2004468 Project ID
28 MK3 Boat model	CHARGER CABLES 1 ENGINE Title	HL Loc	58 / 106 Sheet

NOTICE! CABLES WITH STICKER

FOR EXAMPLE

POINT -A-

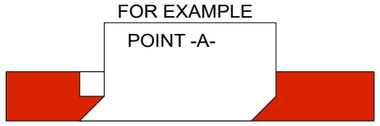

Install in indicated locations. Altogether 1 pcs each.

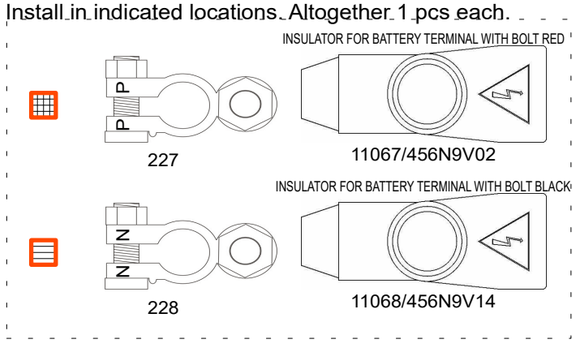

NOTICE!
BATTERY CABLES NEED MARKINGS
SHOWN IN EXAMPLE BELOW. PRINTED EVERY 120mm.

EXEMPTION:
ALL BLACK WIRES
THIS MARKING IS NOT NEEDED.

EXAMPLE: RED 50mm2 WIRE MARKINGS.

MARKING SHOWN ABOVE ONLY TO CABLES LISTED BELOW.

LOOK FOR EQUIVALENT AWG SIZE FOR mm2
AND ADD THIS TO CABLE MARKINGS.

FOR EXAMPLE:
CABLE SIZE IS 70mm2 --> MARKING AWG2/0.

EQUIVALENCY:

mm2		AWG
50 mm2	=	AWG0
70 mm2	=	AWG2/0
95 mm2	=	AWG3/0
120 mm2	=	250 kcmil

Customer:
Q2:OUT-1 and Q1:OUT-1 are combined to the same isolator output pin when using V10 engine

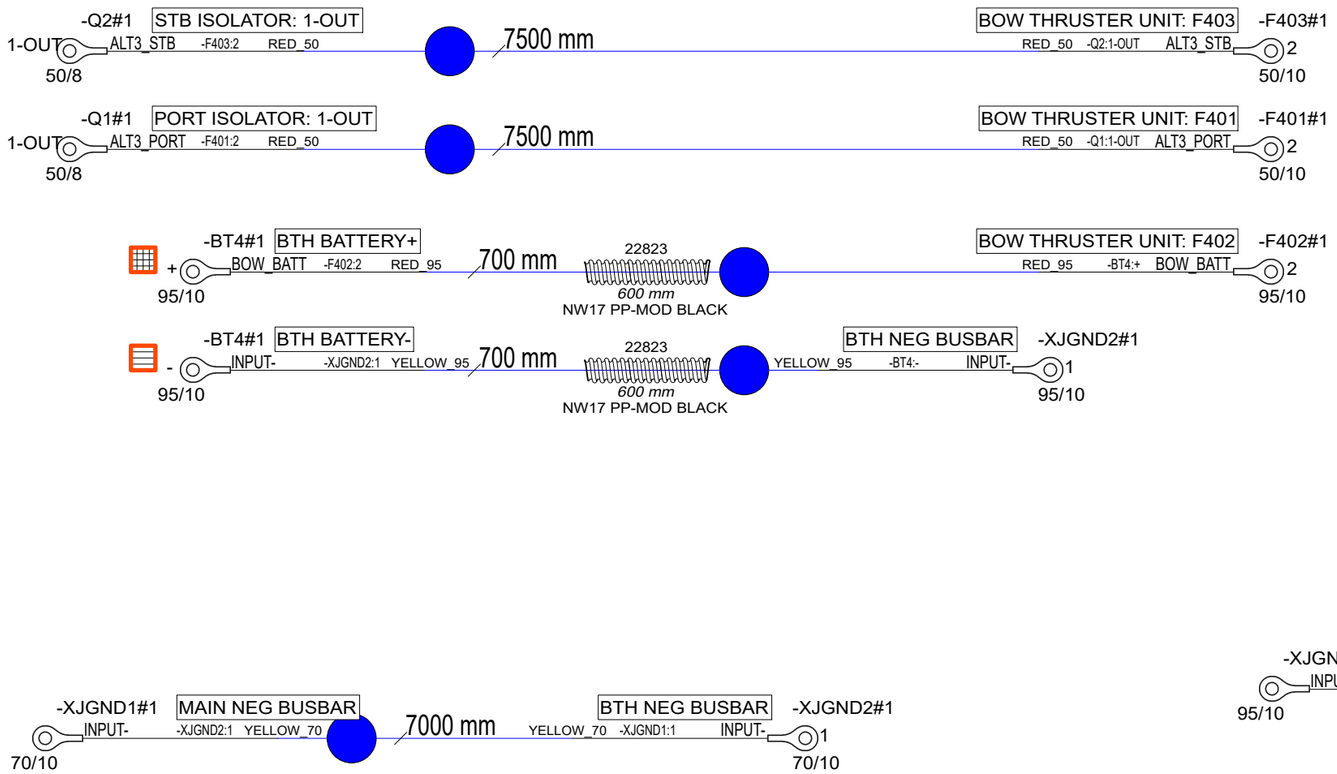

Date of modification	Modified by	Description
28.9.2023	PF	A2: 2004897; V10 update: Cable Q2-F403 +500mm, labels
1.12.2023	PF	A3: 2004800; Length changes
14.5.2024	PF	C4: 2005089; Added battery terminals, cable lug changes

Date	22.3.2023
Drawing by	PF
Sheet rev.	4
Project rev.	C

NAVIX

Copyright by

Axopar Boat	Sub-product code	38680 Product code	2004468 Project ID
28 MK3 Boat model	BOW THRUSTER CABLES Title	HL Loc	59 / 106 Sheet

NOTICE! CABLES WITH STICKER

FOR EXAMPLE

POINT -A-

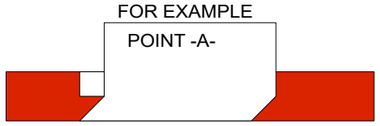

NOTICE!
BATTERY CABLES NEED MARKINGS
SHOWN IN EXAMPLE BELOW. PRINTED EVERY 120mm.

EXEMPTION:
ALL BLACK WIRES
THIS MARKING IS NOT NEEDED.

MARKING

R2 ISO 6722 100V AWG6 +100 C

CABLE

EXAMPLE: RED 16mm2 WIRE MARKINGS.

MARKING SHOWN ABOVE ONLY TO CABLES LISTED BELOW.

LOOK FOR EQUIVALENT AWG SIZE FOR mm2
AND ADD THIS TO CABLE MARKINGS.

FOR EXAMPLE:
CABLE SIZE IS 25mm2 --> MARKING AWG3.

EQUIVALENCY:

mm2		AWG
10 mm2	=	AWG8
16 mm2	=	AWG6
25 mm2	=	AWG3
35 mm2	=	AWG2

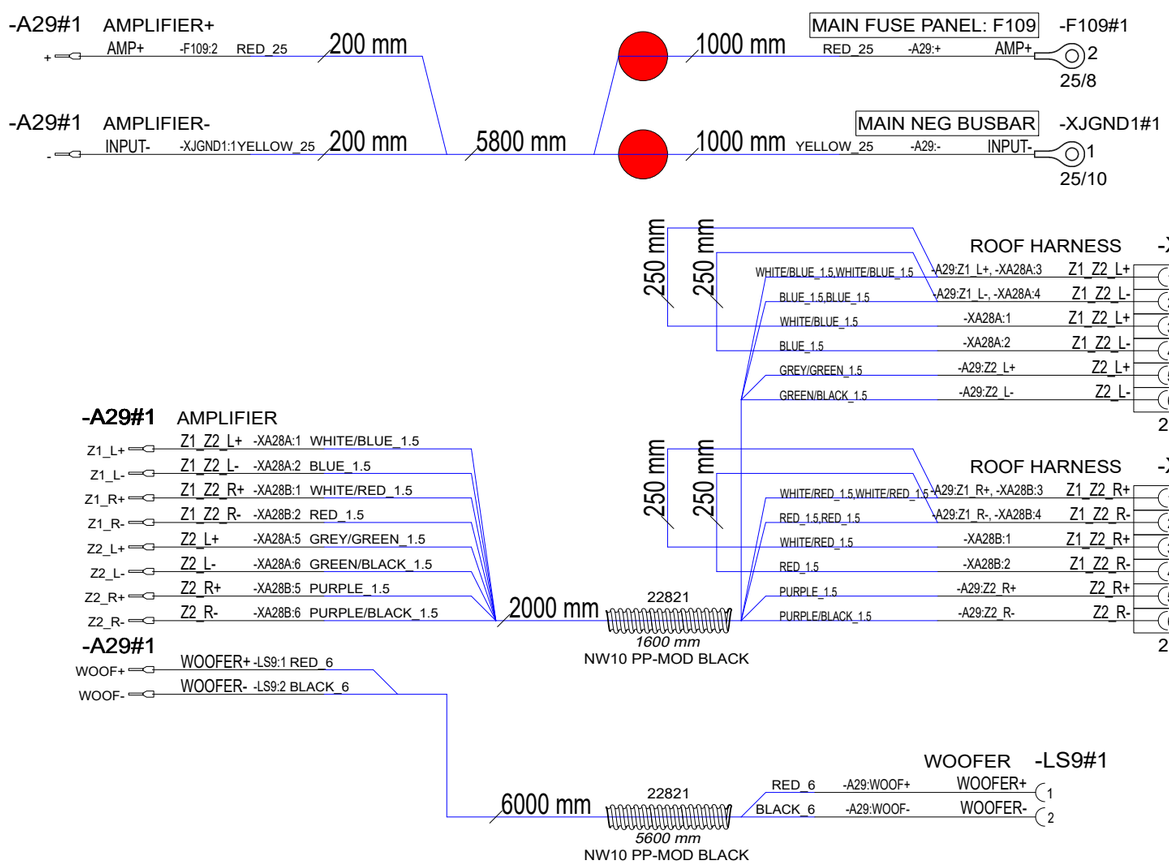

INCLUDED, CUSTOMER
INSTALLS TO MAIN FUSE UNIT

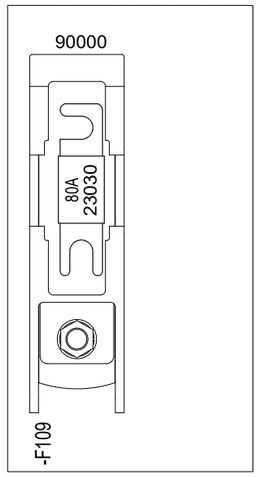

6.10.2023	PF	2004800; labels	Date	23.3.2023	NAVIX	Axopar		38681	2004468
13.5.2024	PF	C2: 2005089; Woofer wire length change	Drawing by	PF		Boat	Sub-product code	Product code	Project ID
7.10.2024	PF	C3: 2005259; Wire end sleeves and conduits added	Sheet rev.	3		28 MK3	AUDIO UPGRADE CABLES	HL	60 / 106
Date of modification	Modified by	Description	Project rev.	C	Copyright by	Boat model	Title	Loc	Sheet

NOTICE! CABLES WITH STICKER

FOR EXAMPLE

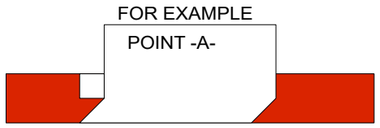

Cable ends with Reference designator e.g. "BT2A" and pin e.g. "-" should be printed to same label in form BT2A: -

NOTICE!
BATTERY CABLES NEED MARKINGS
SHOWN IN EXAMPLE BELOW. PRINTED EVERY 120mm.

EXEMPTION:
ALL BLACK WIRES
THIS MARKING IS NOT NEEDED.

MARKING

R2 ISO 6722 100V AWG6 +100 C

CABLE

EXAMPLE: RED 16mm2 WIRE MARKINGS.

MARKING SHOWN ABOVE ONLY TO CABLES LISTED BELOW.

LOOK FOR EQUIVALENT AWG SIZE FOR mm2
AND ADD THIS TO CABLE MARKINGS.

FOR EXAMPLE:
CABLE SIZE IS 25mm2 --> MARKING AWG3.

EQUIVALENCY:

mm2		AWG
10 mm2	=	AWG8
16 mm2	=	AWG6
25 mm2	=	AWG3
35 mm2	=	AWG2

-Q3
23655
Battery Combiner 80A, 2 batteries
Victron BCD 802

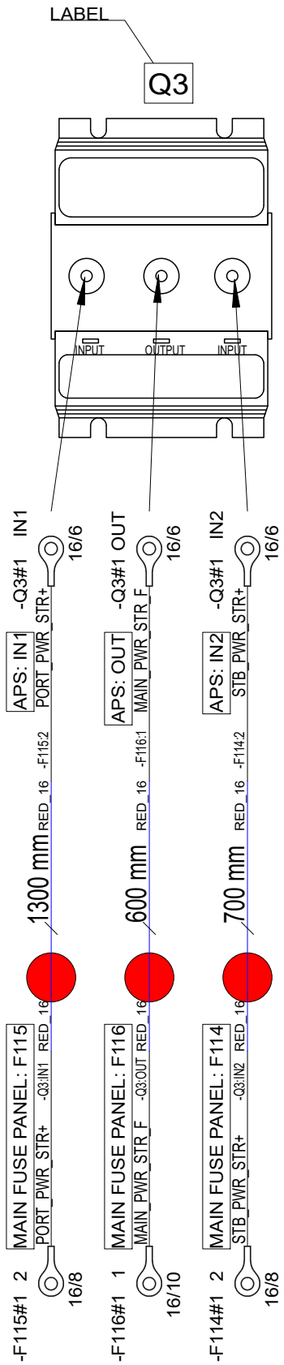

Date of modification	Modified by	Description
6.10.2023	PF	2004800; labels
12.2.2024	PF	B2: 2004979; Q3-F114: -300mm, Q3-F116: -400mm, Q3-F115: +300mm
28.5.2024	PF	C2: 2005089; Not modified

Date	3.4.2023
Drawing by	PF
Sheet rev.	2
Project rev.	C

NAVIX
Copyright by

Axopar Boat	Sub-product code	38698 Product code	2004468 Project ID
28 MK3 Boat model	POWER STEER CABLES NO JPO Title	HL Loc	61/ 106 Sheet

NOTICE! CABLES WITH STICKER

FOR EXAMPLE

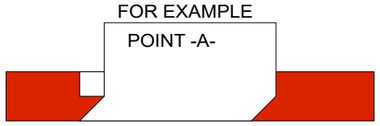

NOTICE!
BATTERY CABLES NEED MARKINGS
SHOWN IN EXAMPLE BELOW. PRINTED EVERY 120mm.

EXEMPTION:
ALL BLACK WIRES
THIS MARKING IS NOT NEEDED.

MARKING

R2 ISO 6722 100V AWG6 +100 C

CABLE

EXAMPLE: RED 16mm2 WIRE MARKINGS.

MARKING SHOWN ABOVE ONLY TO CABLES LISTED BELOW.

LOOK FOR EQUIVALENT AWG SIZE FOR mm2
AND ADD THIS TO CABLE MARKINGS.

FOR EXAMPLE:
CABLE SIZE IS 25mm2 --> MARKING AWG3.

EQUIVALENCY:

mm2		AWG
10 mm2	=	AWG8
16 mm2	=	AWG6
25 mm2	=	AWG3
35 mm2	=	AWG2

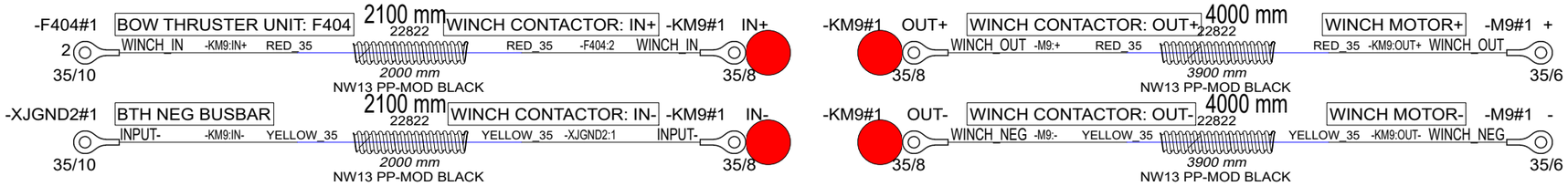

INCLUDED, CUSTOMER
INSTALLS TO BOW THRUSTER UNIT

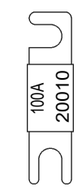

6.10.2023	PF	2004800; labels	Date	3.4.2023	NAVIX	Axopar		38699	2004468
28.5.2024	PF	C1: 2005089; Not modified	Drawing by	PF		Boat	Sub-product code	Product code	Project ID
9.8.2024	PF	C2: 2005089; KM9 in cables +400mm, conduits added	Sheet rev.	2		28 MK3	BOW ANCHOR WINCH CABLES	HL	62 / 106
Date of modification	Modified by	Description	Project rev.	C	Copyright by	Boat model	Title	Loc	Sheet

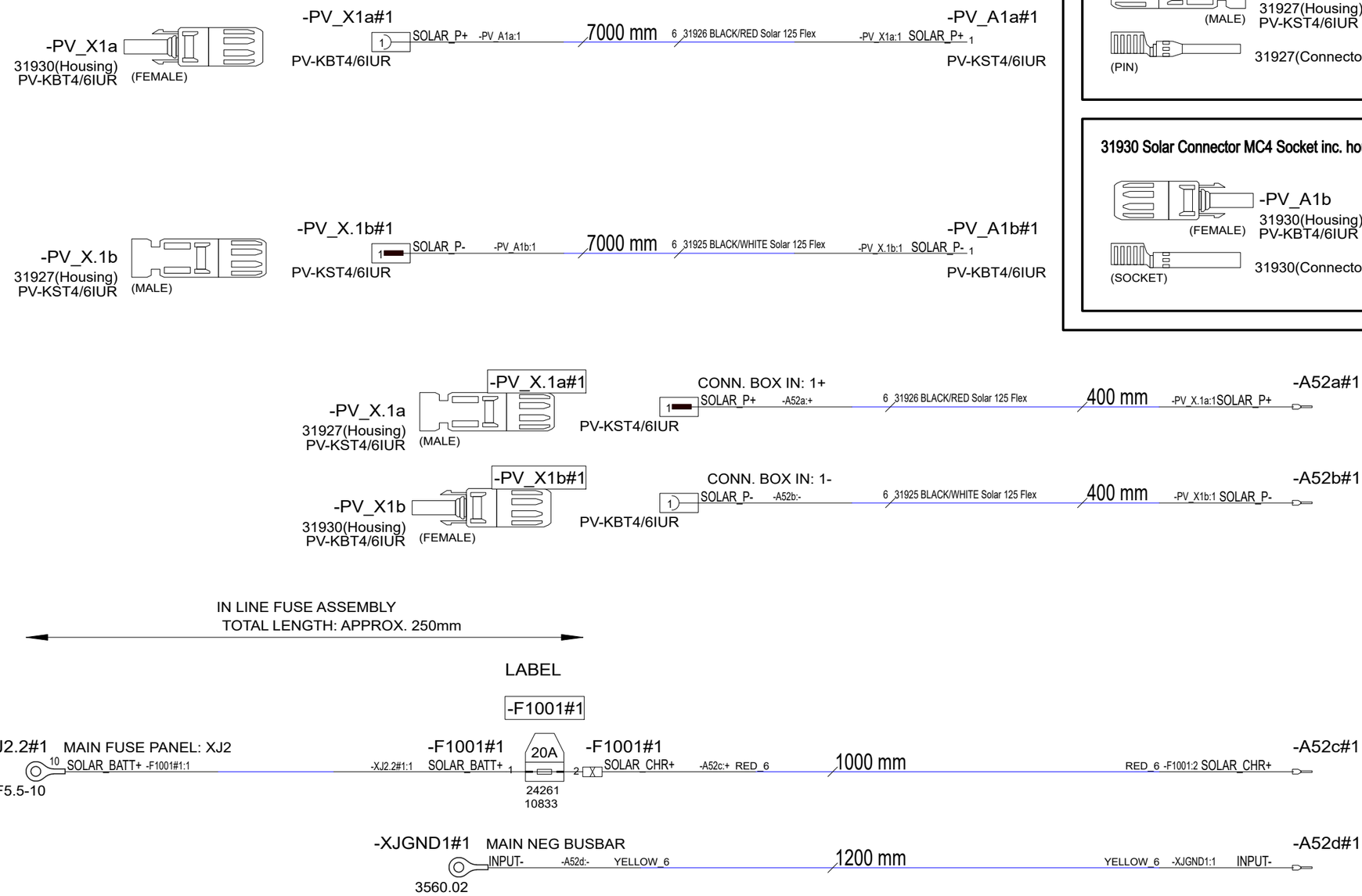

DELIVERED SEPARATELY

SOLAR CABLE CONNECTORS

31927 Solar Connector MC4 Pin inc. housing

-PV_A1a
31927(Housing)
PV-KST4/6IUR
(MALE)
(PIN)
31927(Connector)

31930 Solar Connector MC4 Socket inc. housing

-PV_A1b
31930(Housing)
PV-KBT4/6IUR
(FEMALE)
(SOCKET)
31930(Connector)

SOLAR PANEL CONNECTORS

31930 Solar Connector MC4 Socket inc. housing

-PV_A.1a1
31930(Housing)
PV-KBT4/6IUR
(FEMALE)
31927(Connector)
(SOCKET)

31927 Solar Connector MC4 Pin inc. housing

-PV_A.1b1
31927(Housing)
PV-KST4/6IUR
(MALE)
31930(Connector)
(PIN)

6.5.2024	PF	C1: 2005089; New product	Date	6.5.2024	NAVIX	Axopar		41389	2004468
			Drawing by	PF		Boat	Sub-product code	Product code	Project ID
			Sheet rev.	1		28 MK3	CCX SOLAR CABLES	HL	63 / 106
Date of modification	Modified by	Description	Project rev.	C	Copyright by	Boat model	Title	Loc	Sheet

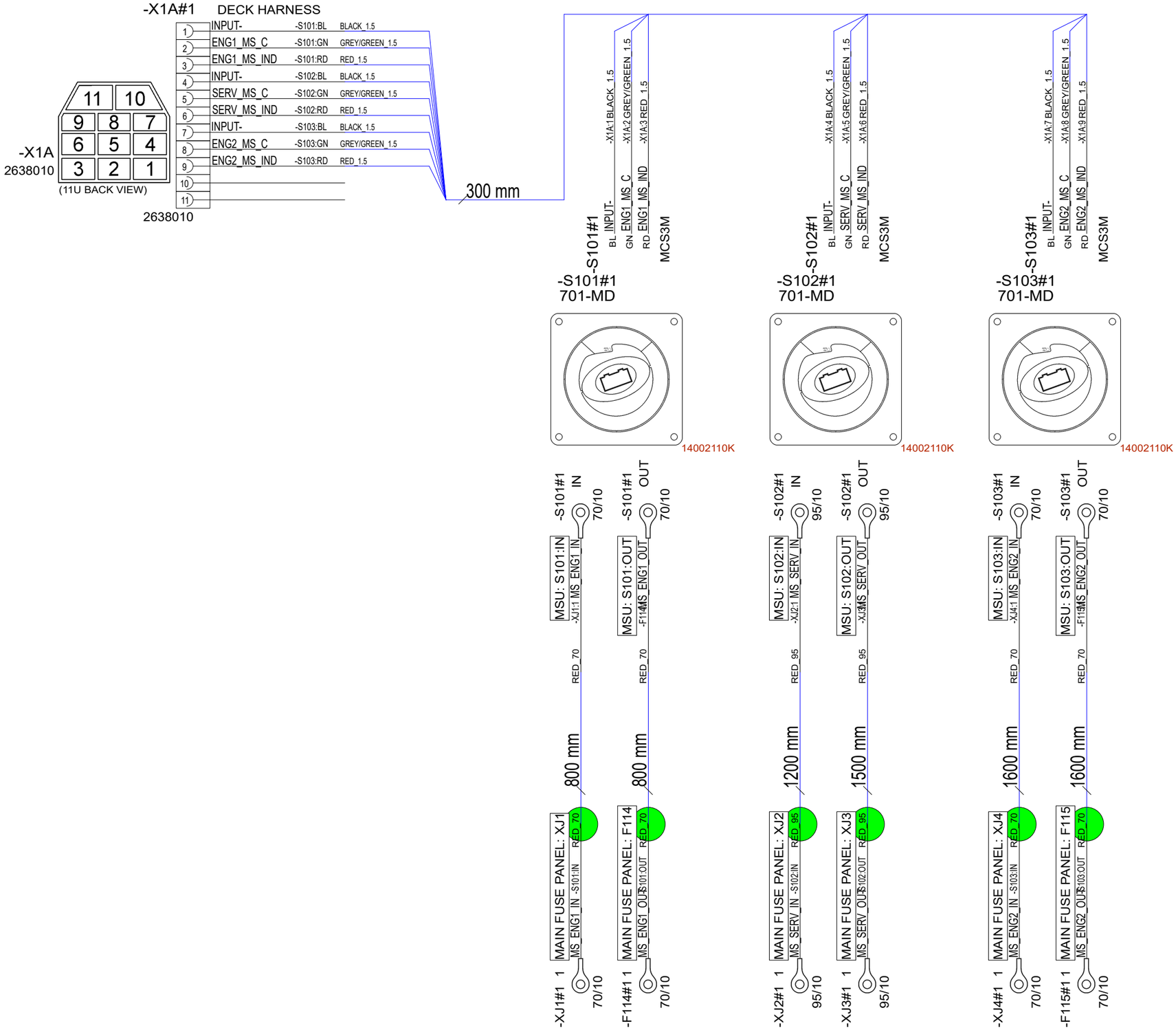

NOTICE! CABLES WITH STICKER

FOR EXAMPLE

POINT -A-

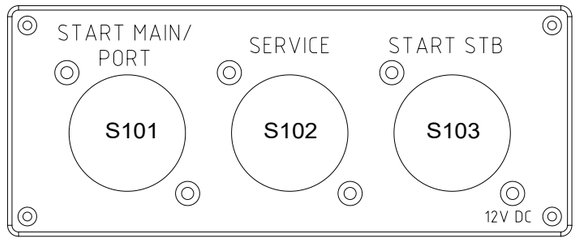

NOTICE!
BATTERY CABLES NEED TO ADD MARKINGS
SHOWN IN EXAMPLE BELOW.

EXEMPTION:
ALL BLACK WIRES
THIS MARKING IS NOT NEEDED.

MARKING

BT-SK 750V AWG2 +100 C

CABLE

EXAMPLE: RED 50mm2 WIRE MARKINGS.

MARKING SHOWN ABOVE ONLY TO CABLES LISTED BELOW.

LOOK FOR EQUIVALENT AWG SIZE FOR mm2
AND ADD THIS TO CABLE MARKINGS.

FOR EXAMPLE:
CABLE SIZE IS 70mm2 --> MARKING AWG2/0.

EQUIVALENCY:

mm2		AWG
25 mm2	=	AWG3
35 mm2	=	AWG2
50 mm2	=	AWG0
70 mm2	=	AWG2/0
95 mm2	=	AWG3/0
120 mm2	=	250 kcmil

Date of modification	Modified by	Description
6.10.2023	PF	A2: 2004800; R2-> BT-SK, labels
12.2.2024	PF	B3: 2004979; F115-S103: 800mm->1600mm
28.5.2024	PF	C3: 2005089; Not modified

Date	23.3.2023
Drawing by	PF
Sheet rev.	3
Project rev.	C

NAVIX
Copyright by

Axopar Boat		38682 Product code	2004468 Project ID
28 MK3 Boat model	MAIN SWITCH UNIT REMOTE Title	HL Loc	64 / 106 Sheet

38682_AXOPAR_28_MAIN_SWITCH_UNIT_REMOTE DUAL ENG.

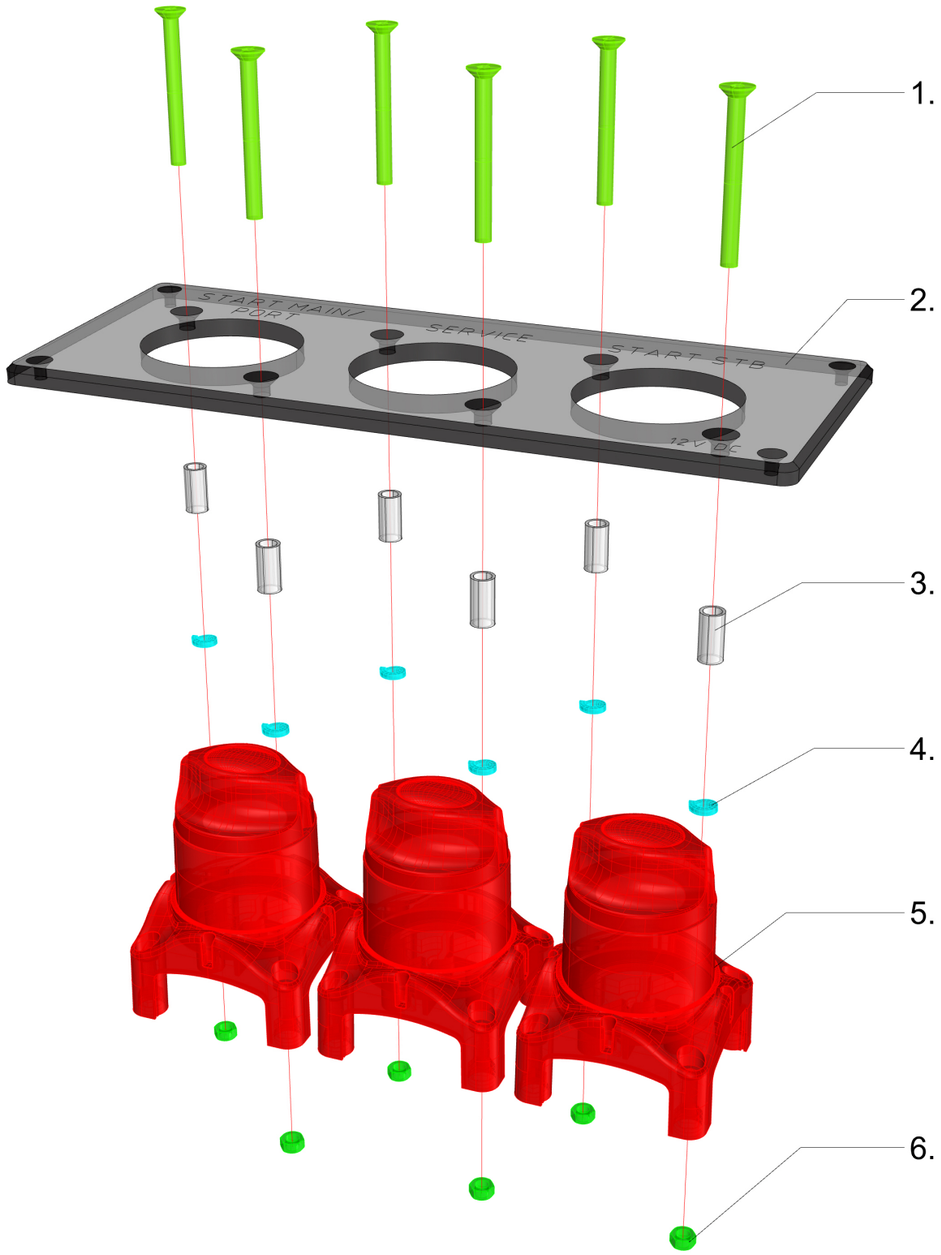

38682_AXOPAR_28_MAIN_SWITCH_UNIT_REMOTE DUAL ENG.

1. 6pcs VMI31811 - Countersunk head Screw HEX socket M5X50 DIN7991

2. 1pc 39053_AXOPAR_28_MSU_PANEL

3. 6pcs 6440 - HOLKKI NAVIX PÄÄKYTKIMEEN - halk. 8/6mm pituus 16mm

4. 6pcs VMI31540 - Spring Lock Washer M5 DIN127

5. 3pcs 14002110K Remote Controlled Battery Switch

6. 6pcs VMI31538 - HEX Nut M5 DIN934

16.05.-22 / TE

6.10.2023	PF	A2: 2004800; R2-> BT-SK, labels	Date	23.3.2023	NAVIX	Axopar		38682	2004468
12.2.2024	PF	B3: 2004979; F115-S103: 800mm->1600mm	Drawing by	PF		Boat	Sub-product code	Product code	Project ID
28.5.2024	PF	C3: 2005089; Not modified	Sheet rev.	3		28 MK3	MAIN SWITCH UNIT REMOTE	HL	65 / 106
Date of modification	Modified by	Description	Project rev.	C	Copyright by	Boat model	Title	Loc	Sheet

NOTICE! CABLES WITH STICKER

FOR EXAMPLE

POINT -A-

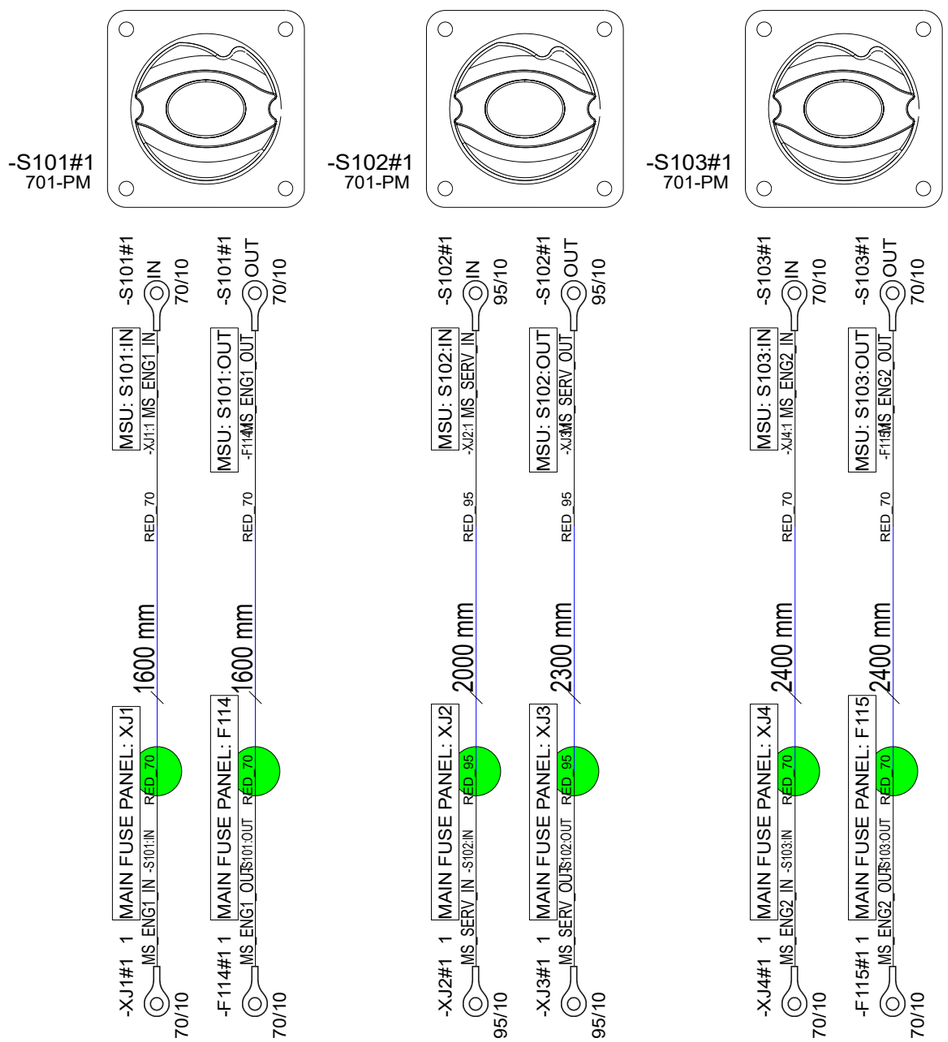

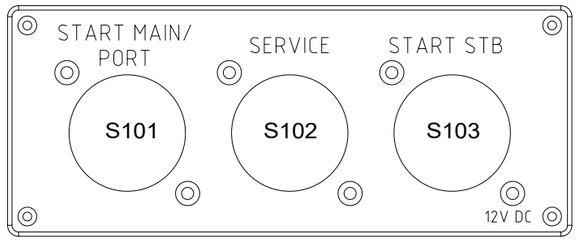

NOTICE!
BATTERY CABLES NEED TO ADD MARKINGS
SHOWN IN EXAMPLE BELOW.

EXEMPTION:
ALL BLACK WIRES
THIS MARKING IS NOT NEEDED.

MARKING

BT-SK 750V AWG2 +100 C

CABLE

EXAMPLE: RED 50mm2 WIRE MARKINGS.

MARKING SHOWN ABOVE ONLY TO CABLES LISTED BELOW.

LOOK FOR EQUIVALENT AWG SIZE FOR mm2
AND ADD THIS TO CABLE MARKINGS.

FOR EXAMPLE:
CABLE SIZE IS 70mm2 --> MARKING AWG2/0.

EQUIVALENCY:

mm2		AWG
25 mm2	=	AWG3
35 mm2	=	AWG2
50 mm2	=	AWG0
70 mm2	=	AWG2/0
95 mm2	=	AWG3/0
120 mm2	=	250 kcmil

Date of modification	Modified by	Description
6.10.2023	PF	A2: 2004800; R2-> BT-SK, labels
12.2.2024	PF	B3: 2004979; F115-S103: 1600mm->2400mm
28.5.2024	PF	C3: 2005089; Not modified

Date	23.3.2023
Drawing by	PF
Sheet rev.	3
Project rev.	C

NAVIX
Copyright by

Axopar Boat		38683 Product code	2004468 Project ID
28 MK3 Boat model	MAIN SWITCH UNIT MANUAL Title	HL Loc	66 / 106 Sheet

38683_AXOPAR_28_MAIN_SWITCH_UNIT_MANUAL DUAL ENG.

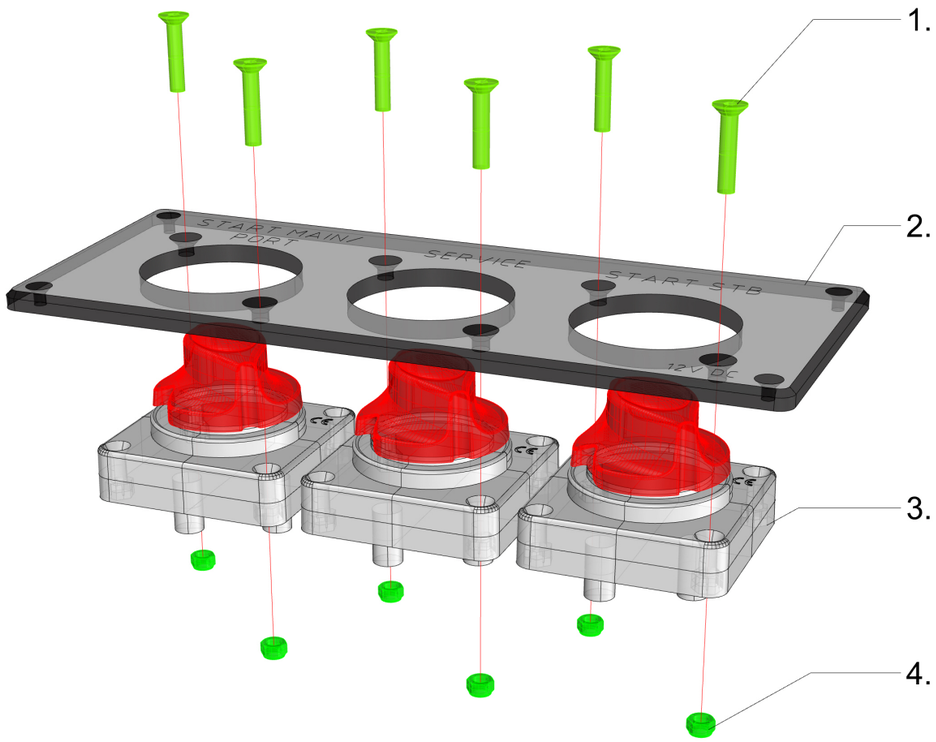

38683_AXOPAR_28_MAIN_SWITCH_UNIT_MANUAL DUAL ENG.

1. 6pcs VMI31807 - Countersunk head Screw HEX socket M5X25 DIN7991

2. 1pc 39053_AXOPAR_28_MSU_PANEL

3. 3pcs 701-PM - Battery Main Switch 275A, Panel Mounted - Bep 701B-PM

4. 6pcs VMI31539 - Self-locking HEX Nut M5 DIN985

16.05.-22 / TE

Date of modification	Modified by	Description
6.10.2023	PF	A2: 2004800; R2-> BT-SK, labels
12.2.2024	PF	B3: 2004979; F115-S103: 1600mm->2400mm
28.5.2024	PF	C3: 2005089; Not modified

Date	23.3.2023
Drawing by	PF
Sheet rev.	3
Project rev.	C

NAVIX

Copyright by

Axopar Boat	Sub-product code	38683 Product code	2004468 Project ID
28 MK3 Boat model	MAIN SWITCH UNIT MANUAL Title	HL Loc	67 / 106 Sheet

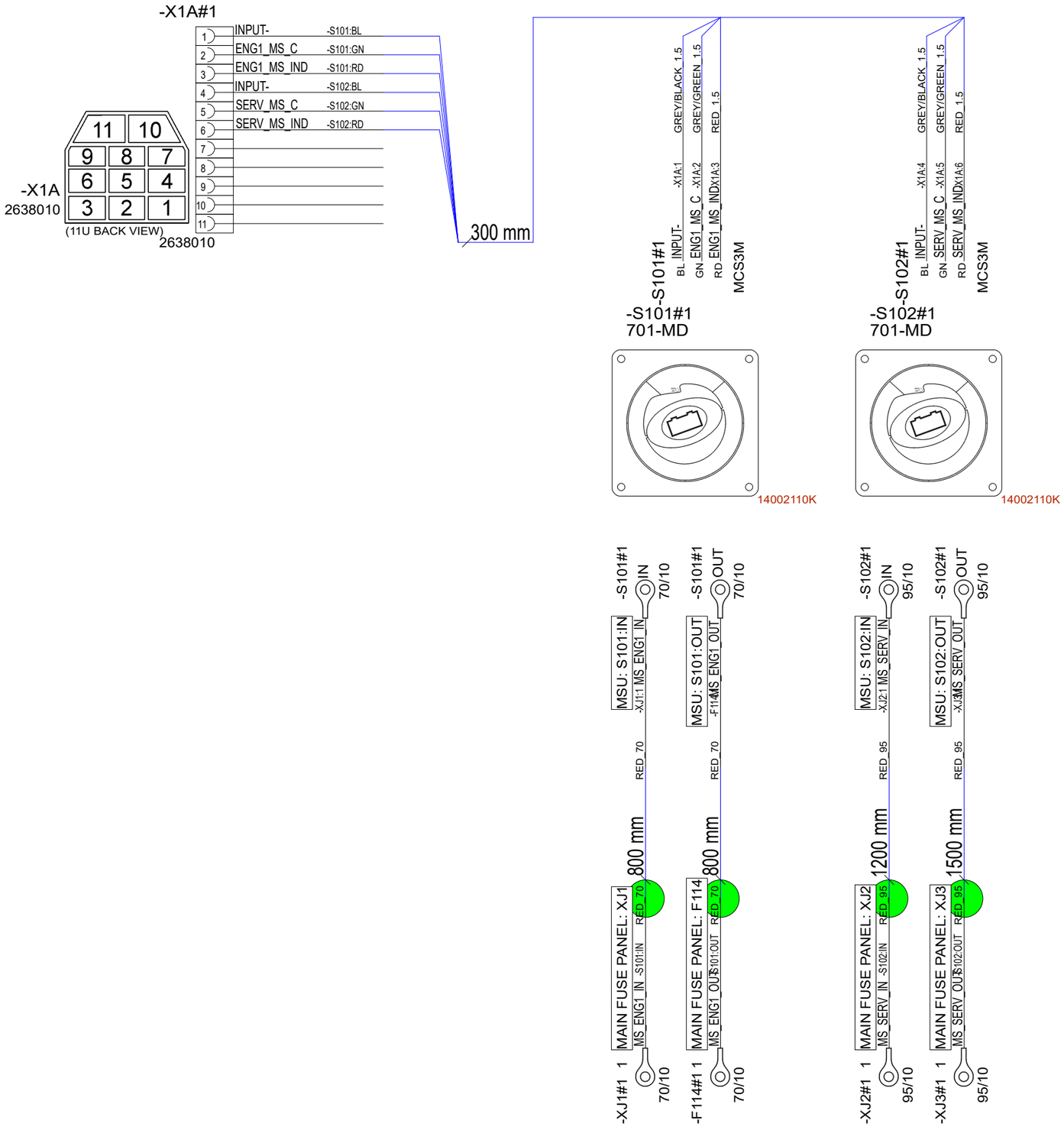

NOTICE! CABLES WITH STICKER

FOR EXAMPLE

POINT -A-

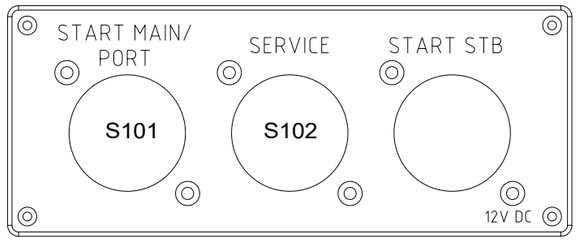

NOTICE!
BATTERY CABLES NEED TO ADD MARKINGS
SHOWN IN EXAMPLE BELOW.

EXEMPTION:
ALL BLACK WIRES
THIS MARKING IS NOT NEEDED.

MARKING

BT-SK 750V AWG2 +100 C

CABLE

EXAMPLE: RED 50mm2 WIRE MARKINGS.

MARKING SHOWN ABOVE ONLY TO CABLES LISTED BELOW.

LOOK FOR EQUIVALENT AWG SIZE FOR mm2
AND ADD THIS TO CABLE MARKINGS.

FOR EXAMPLE:
CABLE SIZE IS 70mm2 --> MARKING AWG2/0.

EQUIVALENCY:

mm2		AWG
25 mm2	=	AWG3
35 mm2	=	AWG2
50 mm2	=	AWG0
70 mm2	=	AWG2/0
95 mm2	=	AWG3/0
120 mm2	=	250 kcmil

Date of modification	Modified by	Description
6.10.2023	PF	A2: 2004800; R2-> BT-SK, labels
--	PF	B2: Not modified
28.5.2024	PF	C2: 2005089; Not modified

Date	25.4.2023
Drawing by	PF
Sheet rev.	2
Project rev.	C

NAVIX
Copyright by

Axopar Boat	Sub-product code	38909 Product code	2004468 Project ID
28 MK3 Boat model	MAIN SWITCH UNIT REMOTE SE Title	HL Loc	68 / 106 Sheet

38909_AXOPAR_28_MAIN_SWITCH_UNIT_REMOTE_SE

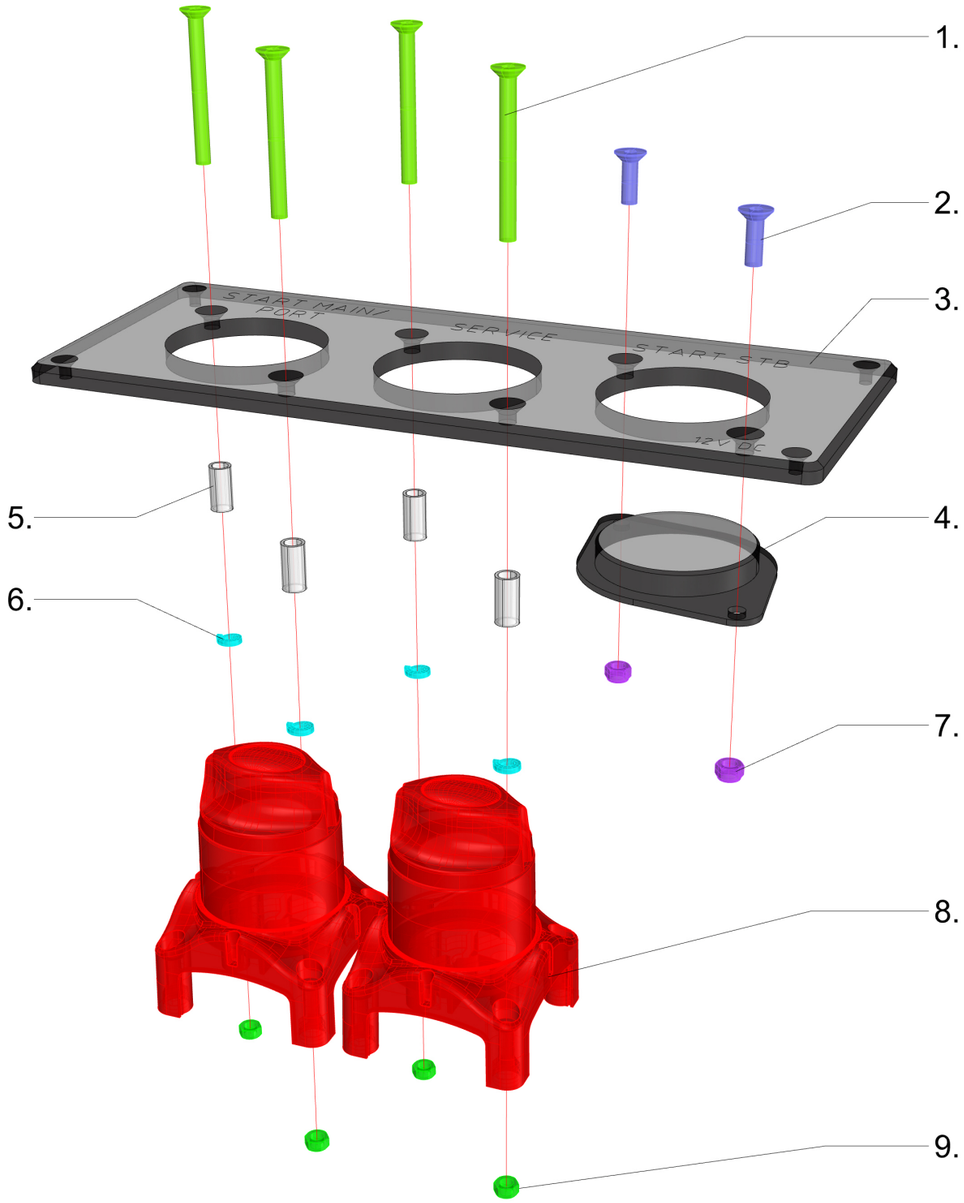

38909_AXOPAR_28_MAIN_SWITCH_UNIT_REMOTE_SE

1. 4pcs VMI31811 - Countersunk head Screw HEX socket M5X50 DIN7991

3. 2pc VMI31796 - Countersunk head Screw HEX socket M5X16 DIN7991

3. 1pc 39053_AXOPAR_28_MSU_PANEL

4. 1pc 39054_NAVIX_MS_PLUG_BEP_HPL

5. 4pcs 6440 - HOLKKI NAVIX PÄÄKYTKIMEEN - halk. 8/6mm pituus 16mm

6. 4pcs VMI31540 - Spring Lock Washer M5 DIN127

7. 2pcs VMI31539 - Self-locking HEX Nut M5 DIN985

8. 2pcs 14002110K Remote Controlled Battery Switch

9. 4pcs VMI31538 - HEX Nut M5 DIN934

16.05.-22 / TE

6.10.2023	PF	A2: 2004800; R2-> BT-SK, labels	Date	25.4.2023	NAVIX	Axopar		38909	2004468
--	PF	B2: Not modified	Drawing by	PF		Boat	Sub-product code	Product code	Project ID
28.5.2024	PF	C2: 2005089; Not modified	Sheet rev.	2		28 MK3	MAIN SWITCH UNIT REMOTE SE	HL	69 / 106
Date of modification	Modified by	Description	Project rev.	C	Copyright by	Boat model	Title	Loc	Sheet

NOTICE! CABLES WITH STICKER

FOR EXAMPLE

POINT -A-

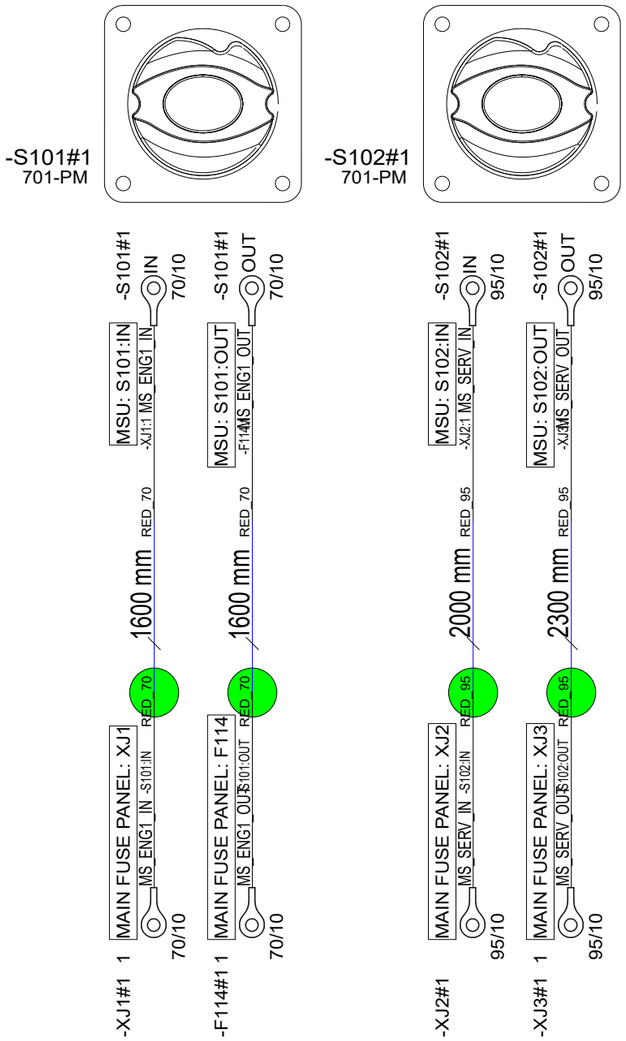

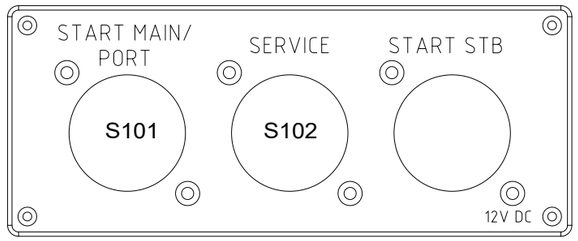

NOTICE!
BATTERY CABLES NEED TO ADD MARKINGS
SHOWN IN EXAMPLE BELOW.

EXEMPTION:
ALL BLACK WIRES
THIS MARKING IS NOT NEEDED.

MARKING

BT-SK 750V AWG2 +100 C

CABLE

EXAMPLE: RED 50mm2 WIRE MARKINGS.

MARKING SHOWN ABOVE ONLY TO CABLES LISTED BELOW.

LOOK FOR EQUIVALENT AWG SIZE FOR mm2
AND ADD THIS TO CABLE MARKINGS.

FOR EXAMPLE:
CABLE SIZE IS 70mm2 --> MARKING AWG2/0.

EQUIVALENCY: mm2		AWG
25 mm2	=	AWG3
35 mm2	=	AWG2
50 mm2	=	AWG0
70 mm2	=	AWG2/0
95 mm2	=	AWG3/0
120 mm2	=	250 kcmil

Date of modification	Modified by	Description
6.10.2023	PF	A2: 2004800; R2-> BT-SK, labels
--	PF	B2: Not modified
28.5.2024	PF	C2: 2005089; Not modified

Date	25.4.2023
Drawing by	PF
Sheet rev.	2
Project rev.	C

NAVIX

Copyright by

Axopar		38910	2004468
Boat	Sub-product code	Product code	Project ID
28 MK3	MAIN SWITCH UNIT MANUAL SE	HL	70 / 106
Boat model	Title	Loc	Sheet

38910_AXOPAR_28_MAIN_SWITCH_UNIT_MANUAL_SE

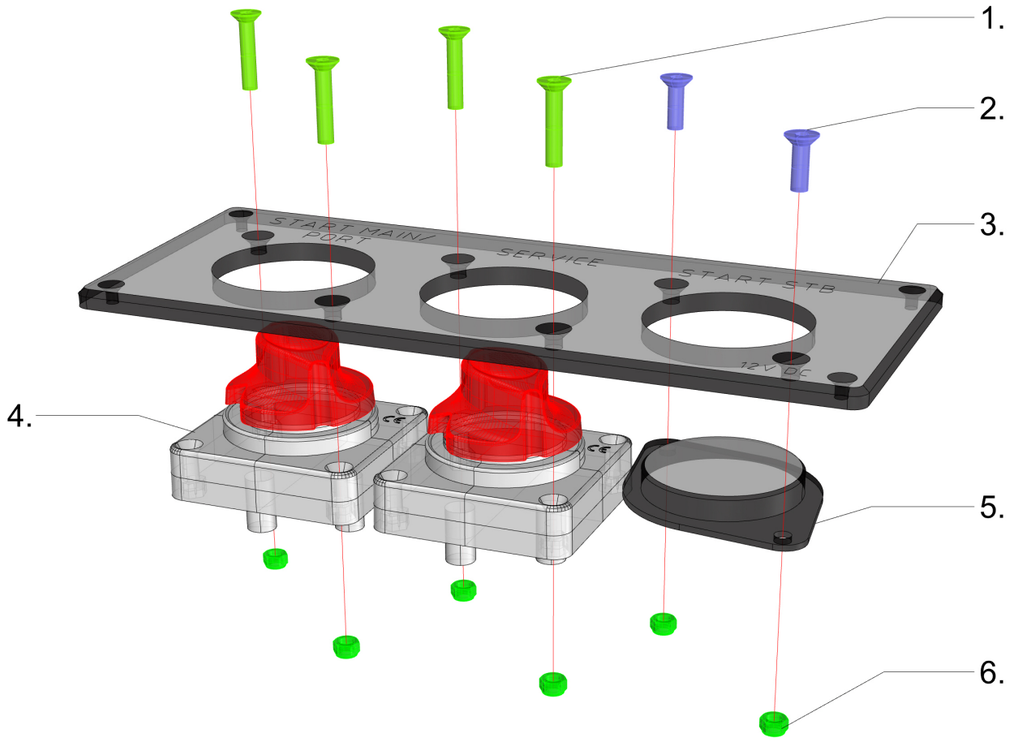

38910_AXOPAR_28_MAIN_SWITCH_UNIT_MANUAL_SE

1. 4pcs VMI31807 - Countersunk head Screw HEX socket M5X25 DIN7991

2. 2pcs VMI31796 - Countersunk head Screw HEX socket M5X16 DIN7991

3. 1pc 39053_AXOPAR_28_MSU_PANEL

4. 2pcs 701-PM - Battery Main Switch 275A, Panel Mounted - Bep 701B-PM

5. 1pc 39054_NAVIX_MS_PLUG_BEP_HPL

6. 6pcs VMI31539 - Self-locking HEX Nut M5 DIN985

16.05.-22 / TE

6.10.2023	PF	A2: 2004800; R2-> BT-SK, labels	Date 25.4.2023	NAVIX	Axopar		38910	2004468
--	PF	B2: Not modified	Drawing by PF		Boat	Sub-product code	Product code	Project ID
28.5.2024	PF	C2: 2005089; Not modified	Sheet rev. 2		28 MK3	MAIN SWITCH UNIT MANUAL SE	HL	71/ 106
Date of modification	Modified by	Description	Project rev. C	Copyright by	Boat model	Title	Loc	Sheet

38684_AXOPAR_28_MAIN_FUSE_PANEL

38684_AXOPAR_28_MAIN_FUSE_PANEL

1. 4pcs VMI31829 - HEX socket Head Cap Screw M6X20 DIN912
 BACKSIDE OF 39046
 4pcs VMI31826 - Self-locking HEX Nut M6 DIN985

2. 1pc 40936_AXOPAR_28_MK3_SUPPORT_BRACKET_V1
 + ZIPTIES

DETAIL 1.

1. 1pc 34642 CFBAR1-250SP SINGLE STUD

 1pc VMI36860 HEX NUT 1/4" "UNC A4
 1pc VMI31830 SPRING LOCK WASHER M6 DIN127
 1pc VMI31831 FLAT WASHER FOR HEX BOLTS AND NUTS M6 DIN125A
 1pc VMI36859 FLAT WIDE WASHER FOR HEX BOLTS AND NUTS M6
 1pc 34641 -B.6 CFCOVER-1R SINGLE STUD/RED
 1pc 34640 -PS_F.6 CUBE FUSE MRFB-080 80A

2. 1pc VMI32012 HEX NUT M8 DIN934
 1pc VMI32013 FLAT WASHER FOR HEX BOLT
 1pc VMI32011 SPRING LOCK WASHER M8 DIN127

3. 2pcs VMI30917 COUNTERSUNK HEAD SCREW HEX SOCKET M4X16 DIN7991

4. 1pc VMI32019 - HEX Bolt Full thread M8X30 DIN933

5. 1pc
39047_NAVIX_LINE_CUBE_FUSE_HOLDER_SINGLE_V1

3. 1pc 39058_NAVIX_LINE_BUS_BAR_TYPE5C_6X
 1pc VMI32012 HEX NUT M8 DIN934
 1pc VMI32013 FLAT WASHER FOR HEX BOLT
 1pc VMI32011 SPRING LOCK WASHER M8 DIN127
 1pc VMI32018 HEX BOLT FULL THREAD M8X25 DIN933

4. 1pc 39057_NAVIX_LINE_BUS_BAR_TYPE5C_3X
 1pc VMI32012 HEX NUT M8 DIN934
 1pc VMI32013 FLAT WASHER FOR HEX BOLT
 1pc VMI32011 SPRING LOCK WASHER M8 DIN127
 1pc VMI32018 HEX BOLT FULL THREAD M8X25 DIN933

5. 8pcs 90001_NAVIX_LINE_ANL_HOLDER_TYPE5

6. 1pc
39046_AXOPAR_28_MAIN_FUSE_PANEL_PLATE_V2

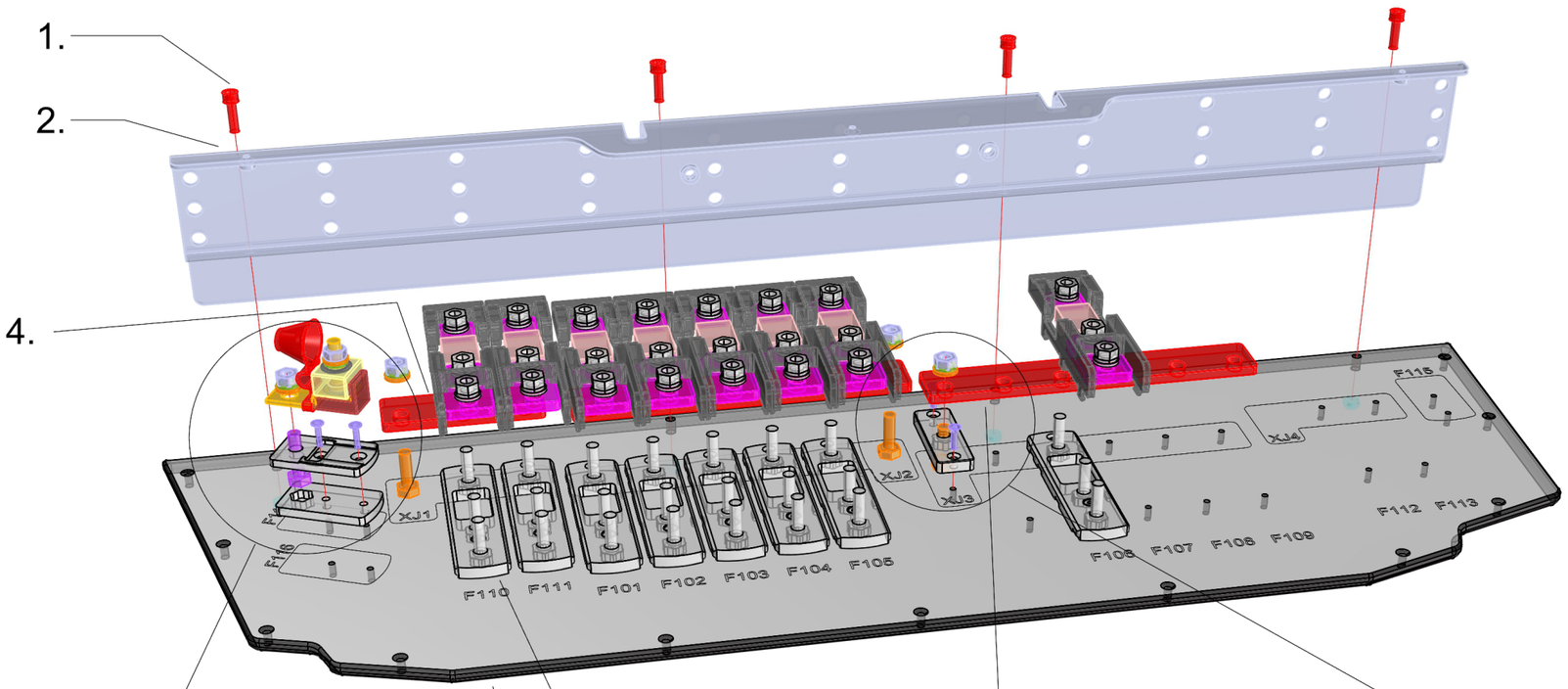

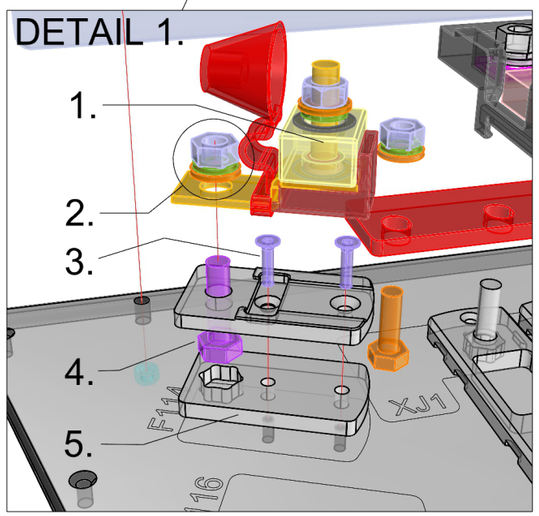

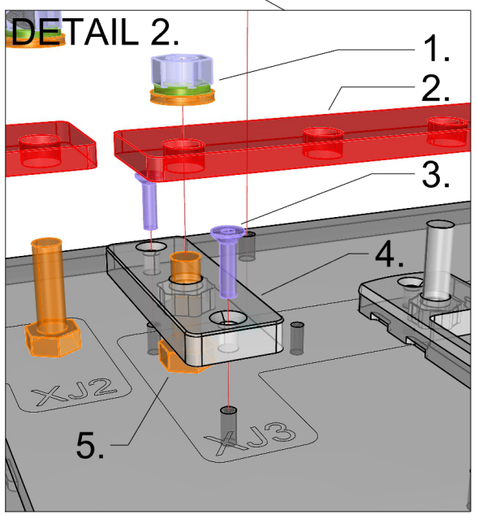

DETAIL 2.

1. 1pc VMI32012 HEX NUT M8 DIN934
 1pc VMI32013 FLAT WASHER FOR HEX BOLT
 1pc VMI32011 SPRING LOCK WASHER M8 DIN127

2. 1pc
39058_NAVIX_LINE_BUS_BAR_TYPE5C_6X

3. 2pcs VMI30917 COUNTERSUNK HEAD SCREW HEX SOCKET M4X16 DIN7991

4. 1pc
39048_NAVIX_LINE_BOLT_BASE_1_V1

5. 1pc VMI32018 HEX BOLT FULL THREAD M8X25 DIN933

16.05.-23 / TE
27.02.-24 / TS

Date of modification	Modified by	Description
27.2.2024	PF	B2: 2004979; Fuses repositioned (F115 moved prt->stb)
30.4.2024	PF	C2: 2005089; Not modified

Date	3.4.2023
Drawing by	PF
Sheet rev.	2
Project rev.	C

NAVIX
Copyright by

Axopar Boat		38684 Product code	2004468 Project ID
28 MK3 Boat model	MAIN FUSE PANEL Title	HL Loc	72 / 106 Sheet

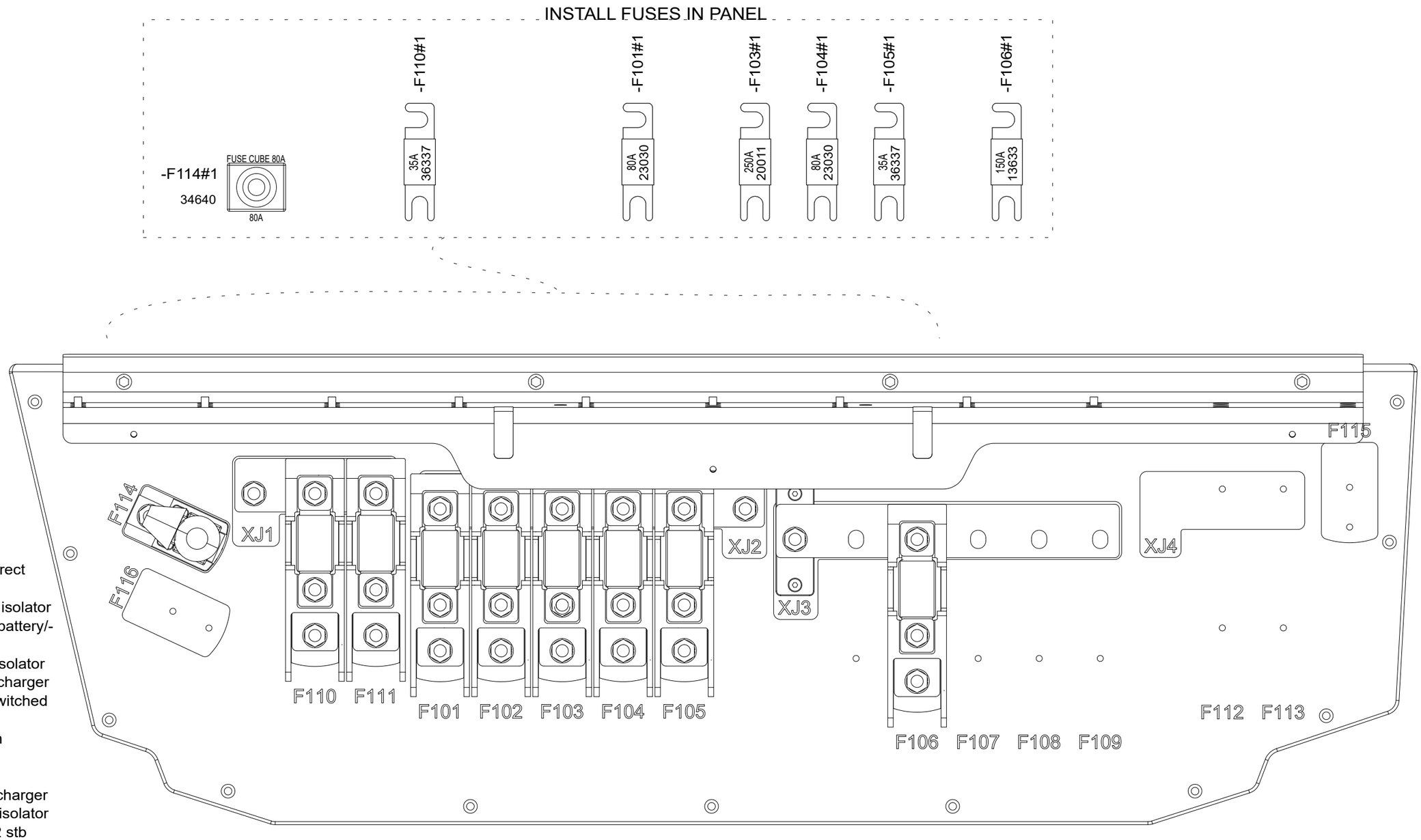

FUSE FUNCTION
F101 To console, direct main supply
F102 From Q1 port isolator
F103 From service battery/-ies
F104 From Q2 stb isolator
F105 From battery charger
F106 To console, switched main supply
F107 OPT aft winch
F108 OPT gyro
F109 OPT amplifier
F110 From battery charger
F111 From Q1 port isolator
F112 OPT From Q2 stb isolator
F113 OPT From battery charger
F114 OPT APS or POWER STEERING PUMP
F115 OPT APS or POWER STEERING PUMP
F116 OPT APS

Date of modification	Modified by	Description
27.2.2024	PF	B2: 2004979; Fuses repositioned (F115 moved prt->stb)
30.4.2024	PF	C2: 2005089; Not modified

Date	23.3.2023
Drawing by	PF
Sheet rev.	2
Project rev.	C

NAVIX
Copyright by

Axopar Boat	Sub-product code	38684 Product code	2004468 Project ID
28 MK3 Boat model	MAIN FUSE PANEL Title	HL Loc	73 / 106 Sheet

FRONT VIEW

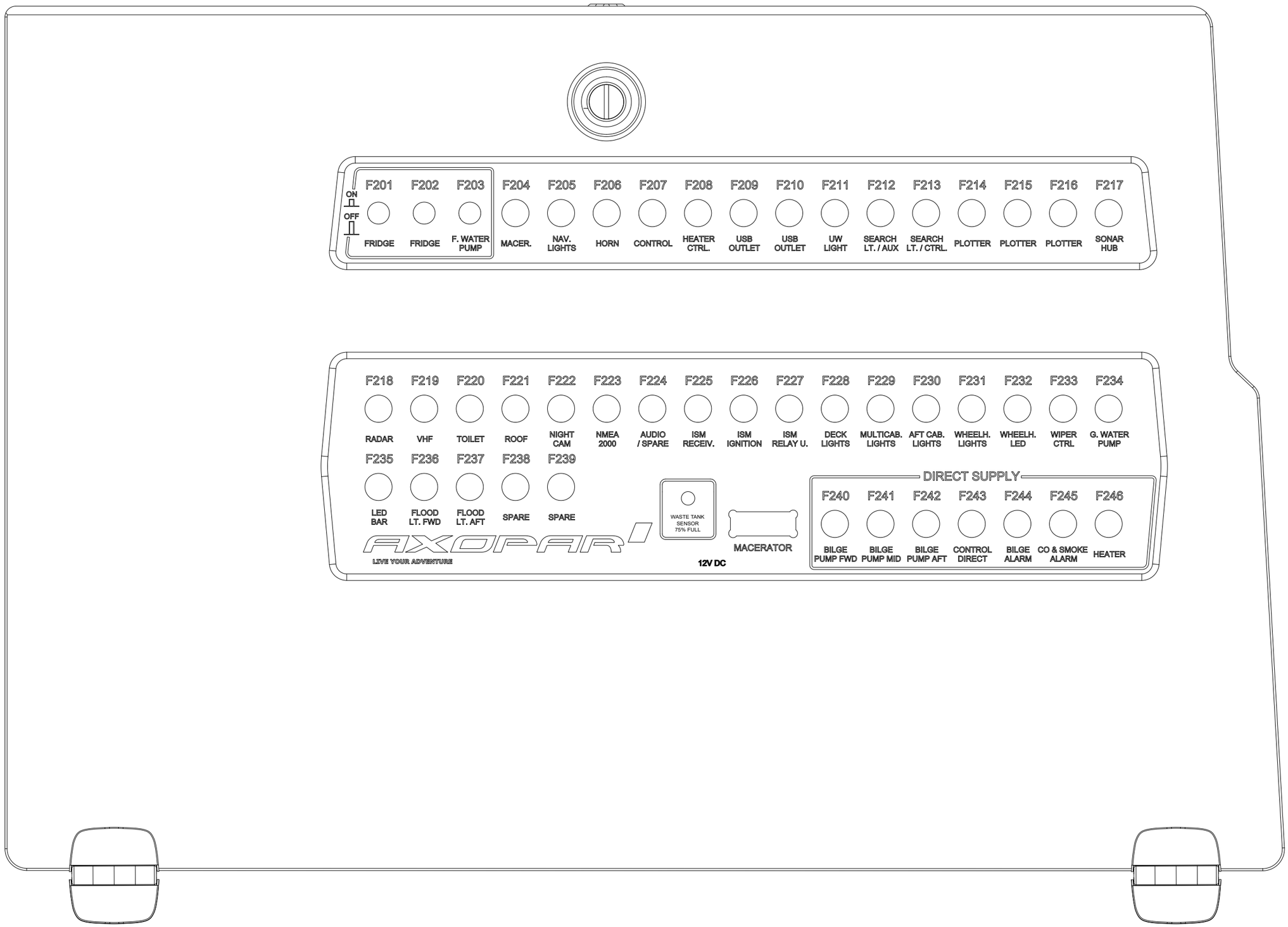

Date of modification	Modified by	Description
19.12.2023	PF	C2:Rel.type->u, fuse no.s, added K206-K213 & F235-F239, input+ rearr.
1.10.2024	PF	C3: 2005259; F228 10A->3A, X2F added, F209 text change

Date	10.11.2023
Drawing by	PF
Sheet rev.	3
Project rev.	C

NAVIX
Copyright by

Axopar Boat		40139 Product code	2004468 Project ID
28 MK3 Boat model	FUSE UNIT ANTH Title	HL Loc	74 / 106 Sheet

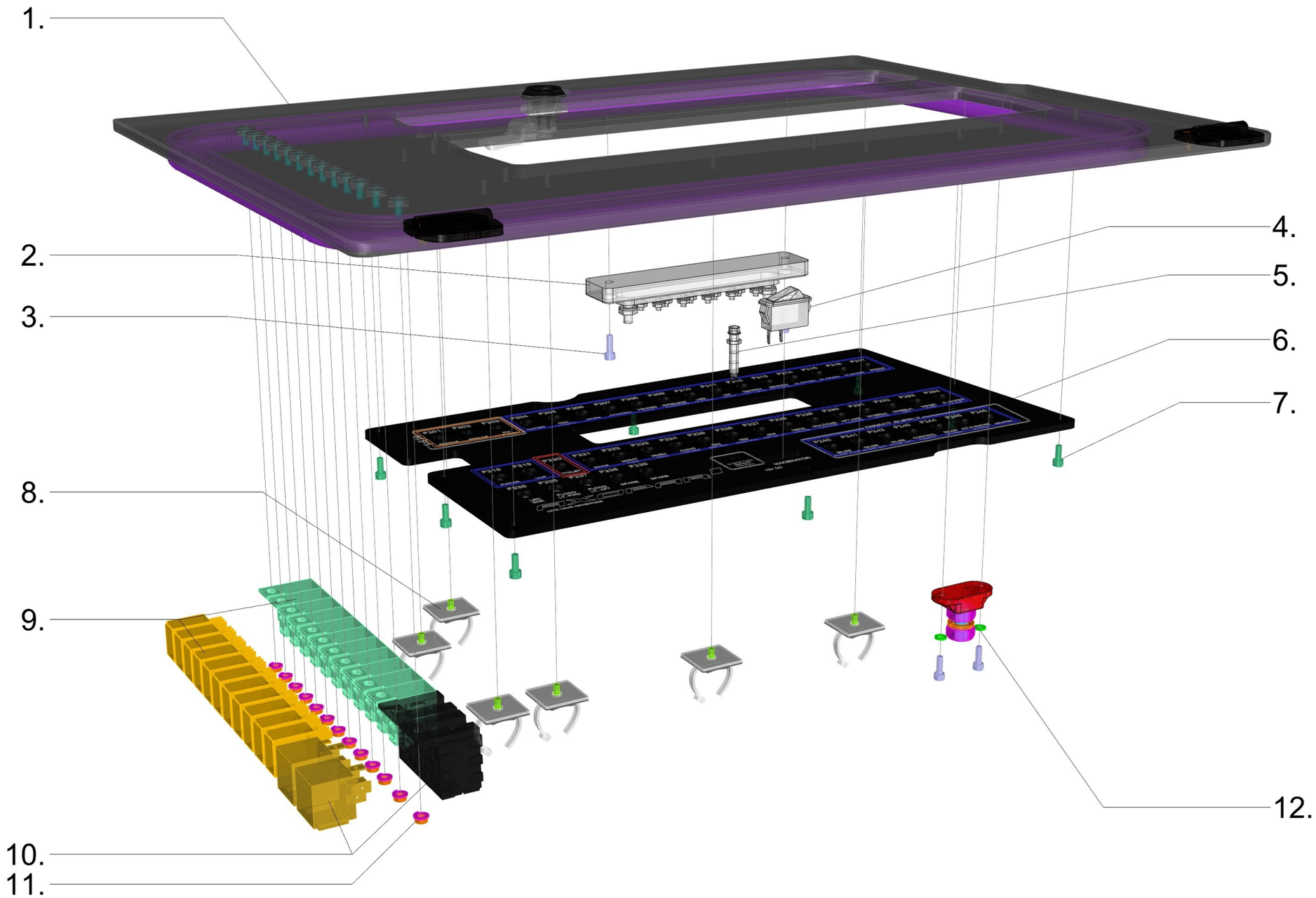

40139_AXOPAR_28_MK3_FUSE_UNIT_ANTH

1. 1 PC
40178_AXOPAR_28_MICROCAB_AFT_WALL_PANEL_ANTH_LOW_PORT_V2

2. 1 PC 28042 - Busbar 10 Gang 150A - Blue Sea 2301

3. 2 PCS VMI30943 HEX SOCKET HEAD CAP SCREW M4X10 DIN912
3.1 2 PCS VMI30906 FLAT WASHER FOR HEX BOLTS AND NUTS M4 DIN125A

4. 1 PC C1501ABBB - KYTKIN 0-1 MOM MUSTA/PUN, MATTA - Arcolectric C1501ABBB

5. 1 PC 19030253 LED PANEL MOUNT INDICATOR, SATIN CHROME BEZEL. RED. 12 VDC, 6mm 20mA, 13MCD, IP40

6. 1 PC 42025_AXOPAR_28_FUSE_PANEL_PLATE_BLACK_V2
42 PCS CARLING CMB SERIES (AS IN DIAGRAM)
1 PC CARLING CLB SERIES (AS IN DIAGRAM)
3 PCS DD FUSE (AS IN DIAGRAM)

7. 8 PCS VMI30943 - HEX socket Head Cap Screw M4X10 DIN912

8. 6 PCS VMI36559 - Self Adhesive Black Cable Tie Mount 5,3mm
6 PCS VMI30913 - Countersunk head Screw HEX socket M4X8 DIN7991
6 PCS ZIP TIES

9. 11 PCS RELAY (AS IN DIAGRAM)

10. 2 PCS RELAY (AS IN DIAGRAM)

11. 13 PCS VMI30904 SPRING LOCK WASHER M4 DIN127
13 PCS VMI30905 HEX NUT M4 DIN934

12. 1 PC 36213 - Insulated Stud, Red - Bep IS-10MM-1R
2 PCS VMI30942 HEX SOCKET HEAD CAP SCREW M4X8 DIN912
2 PCS VMI30906 - Flat Washer for HEX bolts and nuts M4 DIN125A

10.11.2023 / TS (2004937)
12.08.2004 / JS (2005207)
24.10.2024 / TS (2005259)

Date of modification	Modified by	Description
19.12.2023	PF	C2:Rel.type->u, fuse no.s, added K206-K213 & F235-F239, input+ rearr.
1.10.2024	PF	C3: 2005259; F228 10A->3A, X2F added, F209 text change

Date	10.11.2023
Drawing by	PF
Sheet rev.	3
Project rev.	C

NAVIX
Copyright by

Axopar Boat		40139 Product code	2004468 Project ID
28 MK3 Boat model	FUSE UNIT ANTH Title	HL Loc	75 / 106 Sheet

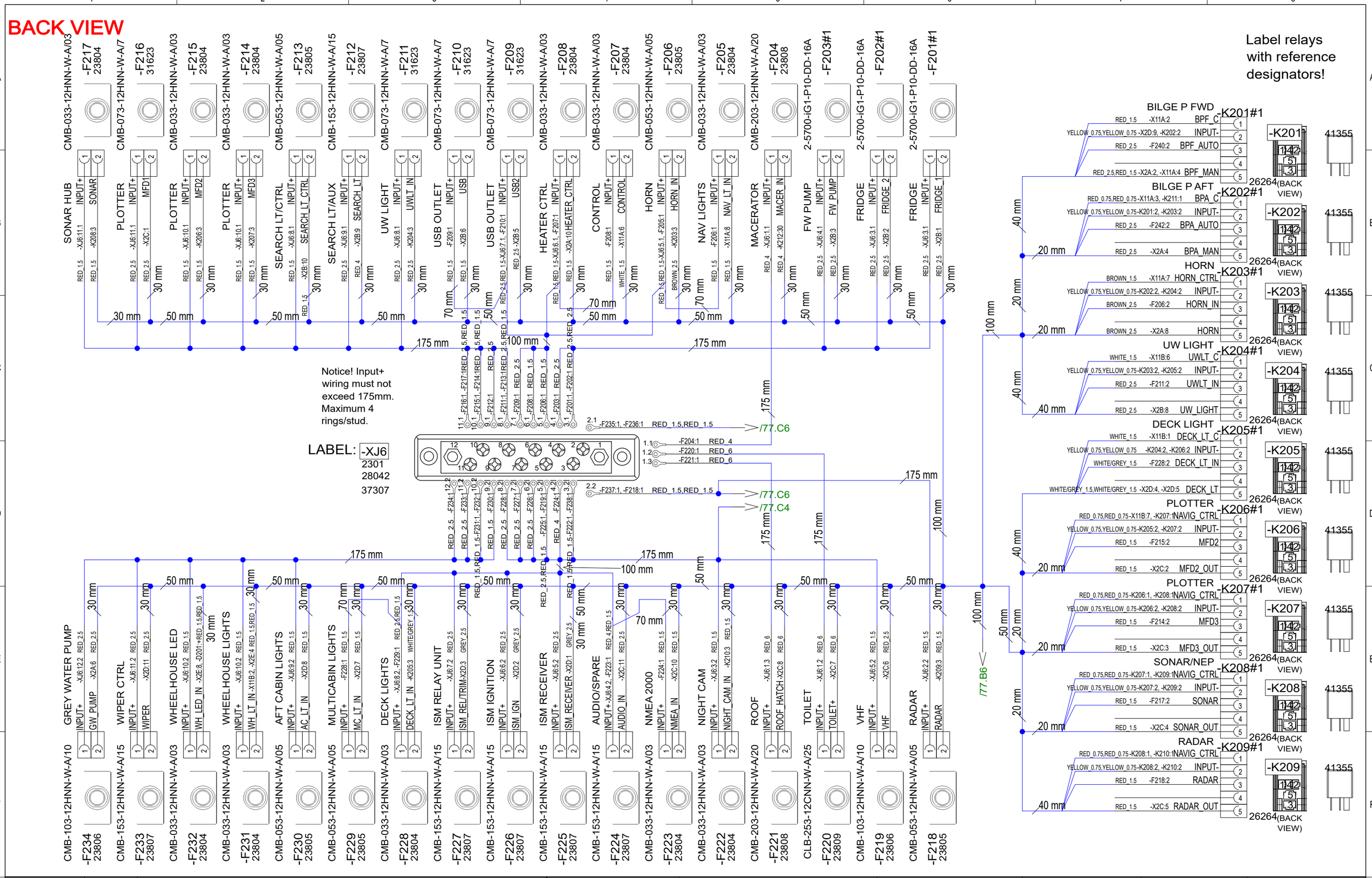

19.12.2023	PF	C2:Rel.type->u, fuse no.s, added K206-K213 & F235-F239, input+ rearr.	Date 24.3.2023	NAVIX	Axopar		
1.10.2024	PF	C3: 2005259; F228 10A->3A, X2F added, F209 text change	Drawing by PF		Boat	Sub-product code	40139 Product code	2004468 Project ID
			Sheet rev. 3		28 MK3	FUSE UNIT ANTH	HL
Date of modification	Modified by	Description	Project rev. C	Copyright by	Boat model	Title	Loc	76 / 106 Sheet

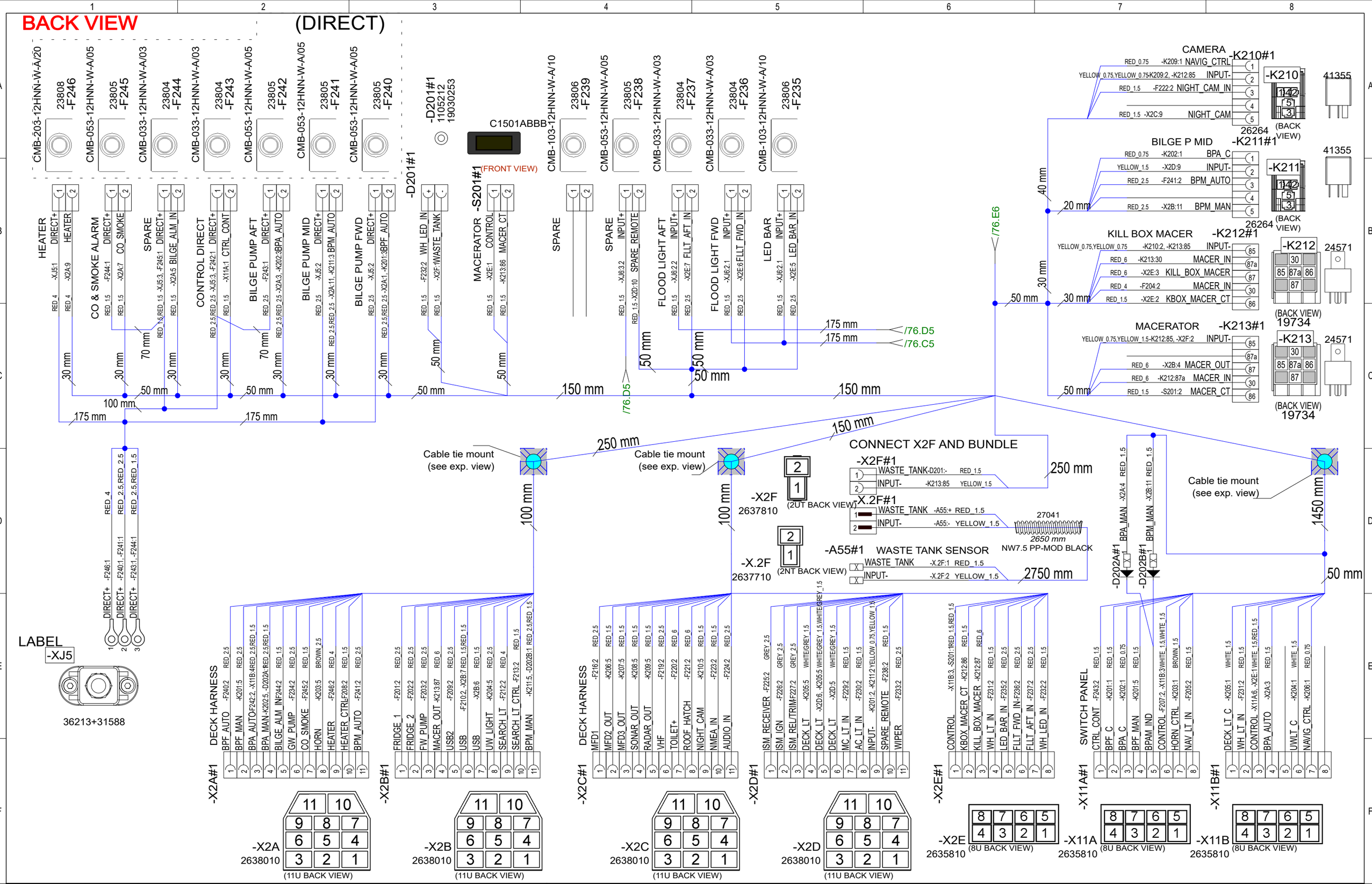

19.12.2023	PF	C2:Rel.type->u, fuse no.s, added K206-K213 & F235-F239, input+ rearr.	Date 17.4.2023	NAVIX	Axopar		40139 / 2004468
1.10.2024	PF	C3: 2005259; F228 10A->3A, X2F added, F209 text change	Drawing by PF		Boat	Sub-product code / Product code	Project ID
			Sheet rev. 3		28 MK3	FUSE UNIT ANTH	HL
Date of modification	Modified by	Description	Project rev. C	Copyright by	Boat model	Title	Loc / 77 / 106 Sheet

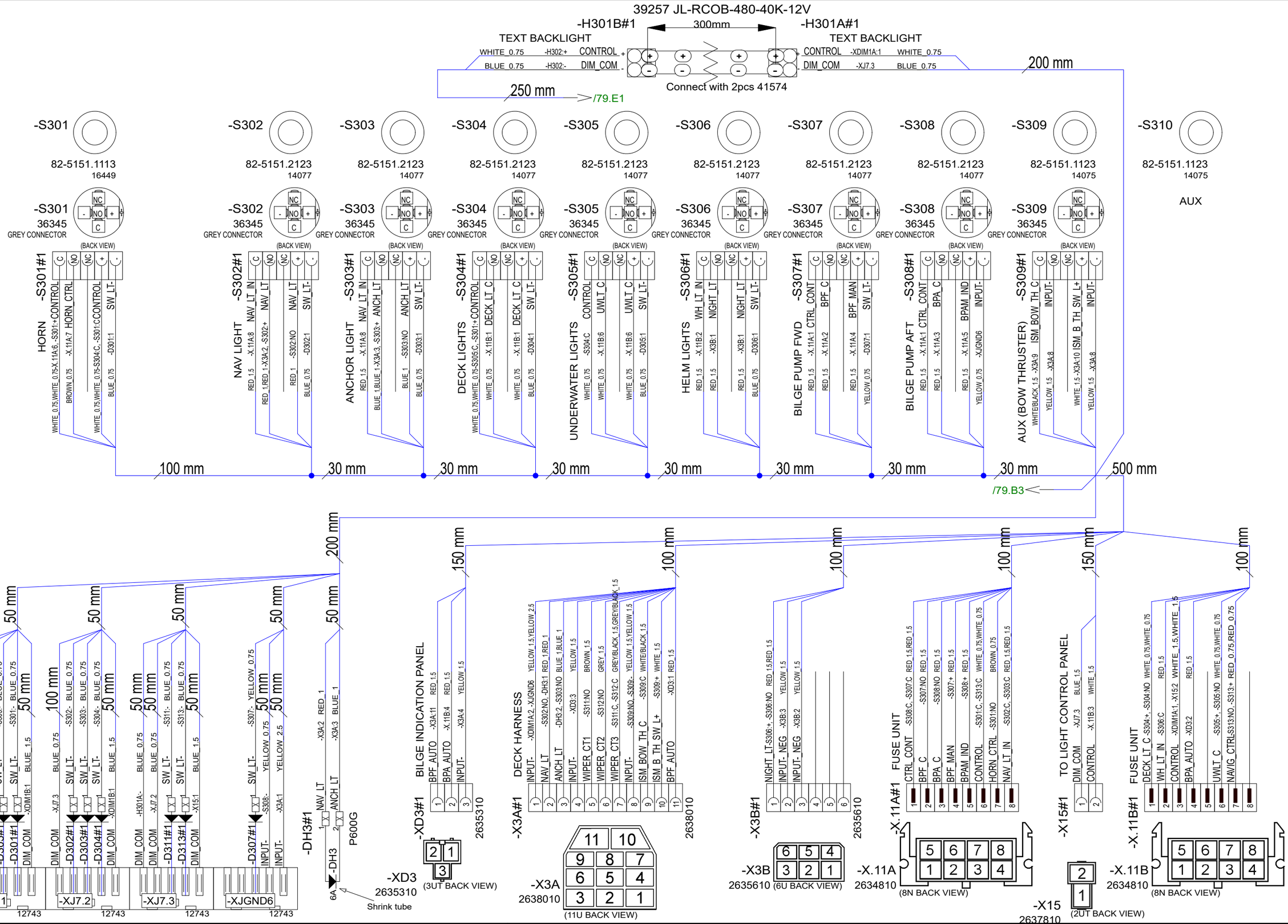

14.10.2024	PF	C5: 2005259; S313 +200mm, pinbolts	Date	23.3.2023	Axopar		38686 / 2004468
5.1.2024	PF	B3: 2004980; ---	Drawing by	PF	Boat	Sub-product code / Product code	Project ID
30.4.2024	PF	C4: 2005089; Light pack and MY25 changes	Sheet rev.	5	28 MK3	SWITCH PANEL	HL
Date of modification	Modified by	Description	Project rev.	C	Boat model	Title	Loc

NAVIX

Copyright by

Sheet: 78 / 106

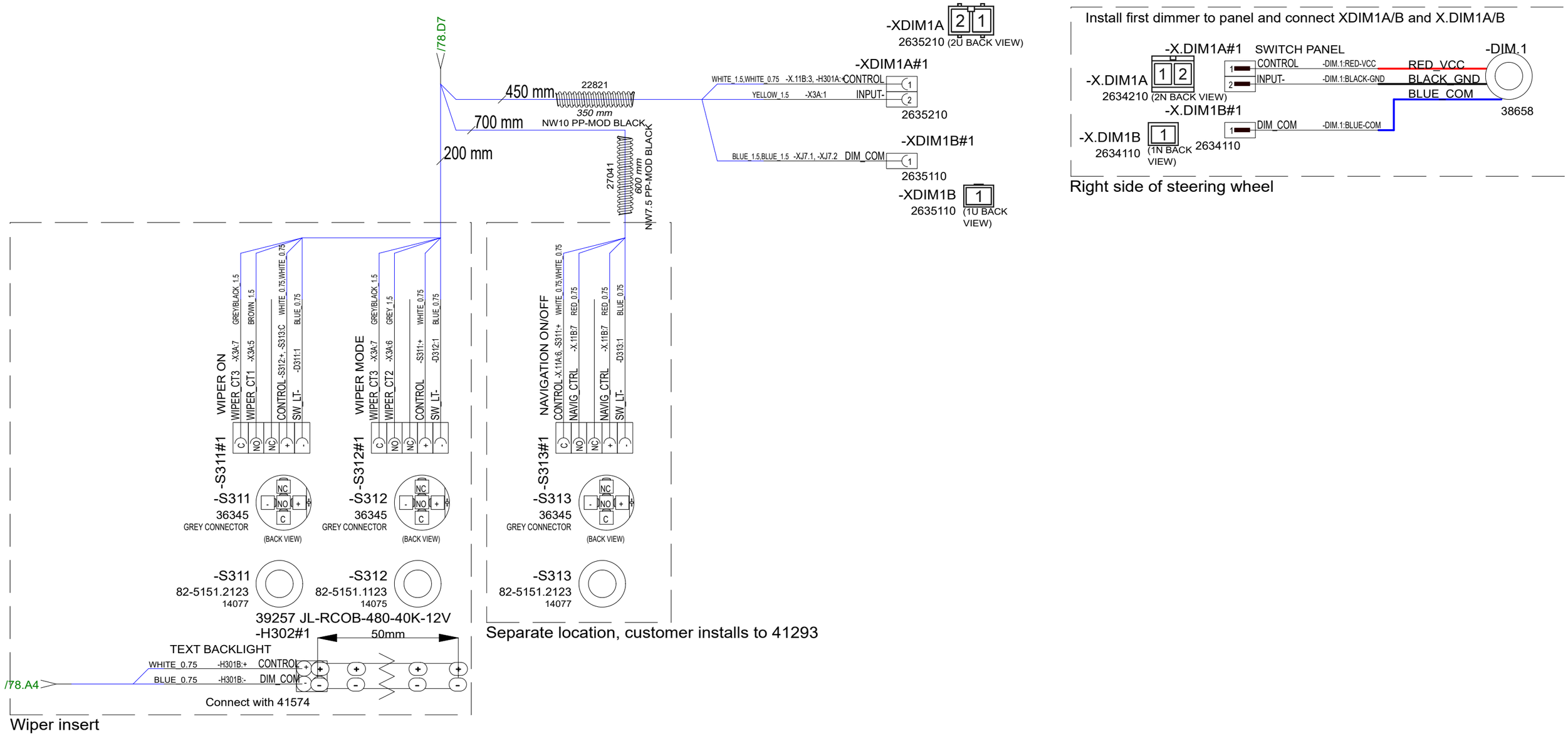

14.10.2024	PF	C5: 2005259; S313 +200mm, pinbolts	Date	30.4.2024	NAVIX	Axopar		38686	2004468
5.1.2024	PF	B3: 2004980; ---	Drawing by	PF		Boat	Sub-product code	Product code	Project ID
30.4.2024	PF	C4: 2005089; Light pack and MY25 changes	Sheet rev.	5		28 MK3	SWITCH PANEL	HL	79 / 106
Date of modification	Modified by	Description	Project rev.	C	Copyright by	Boat model	Title	Loc	Sheet

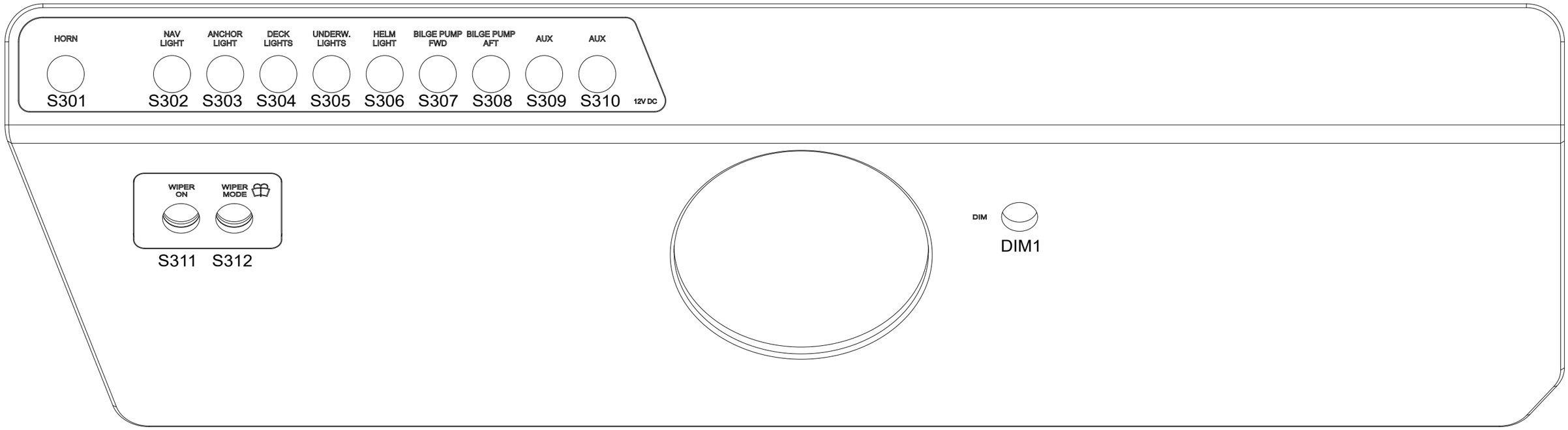

14.10.2024	PF	C5: 2005259; S313 +200mm, pinbolts	Date 19.4.2023	NAVIX	Axopar		38686	2004468
5.1.2024	PF	B3: 2004980; ---	Drawing by PF		Boat	Sub-product code	Product code	Project ID
30.4.2024	PF	C4: 2005089; Light pack and MY25 changes	Sheet rev. 5		28 MK3	SWITCH PANEL	HL	80 / 106
Date of modification	Modified by	Description	Project rev. C	Copyright by	Boat model	Title	Loc	Sheet

38686_AXOPAR_28_SWITCH_PANEL

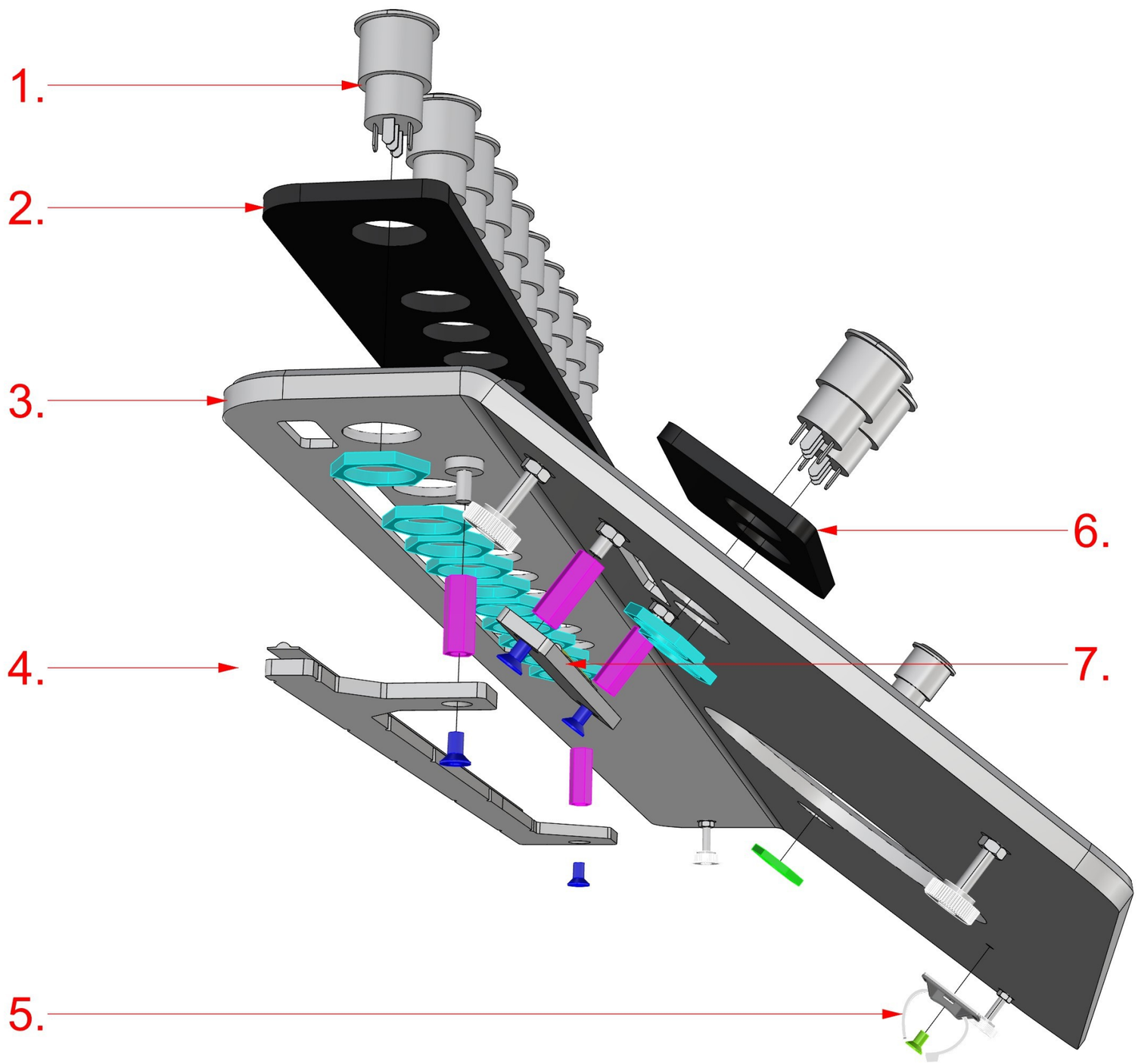

38686_AXOPAR_28_SWITCH_PANEL

1. 13PCS HALO SWITCH (AS IN DIAGRAM)

2. 1PC 39239_AXOPAR_28_SWITCH_PANEL_INSERT_PORT

3. 1PC 39271_AXOPAR_28_SWITCH_PANEL_BASE_V3

4. 1PC 41504_AXOPAR_28_SWITCH_PANEL_LED_HOLDER_LONG_V2
39257 - LED-Strip RCOB 12V 3800-4300K 5m/reel - JL-RCOB-480-40K-12V (300mm)
2pcs VMI32036 EXTENSION BOLT M4 L-20
2pcs VMI30913 COUNTERSUNK HEAD SCREW HEX SOCKET M4X8 DIN7991

5. 1PC VMI36559 - Self Adhesive Black Cable Tie Mount 5,3mm
VMI30913 - Countersunk head Screw HEX socket M4X8 DIN7991

6. 1PC 41485_AXOPAR_28_SWITCH_PANEL_INSERT_2_PORT

7. 1PC 41505_AXOPAR_28_SWITCH_PANEL_LED_HOLDER_SHORT
39257 - LED-Strip RCOB 12V 3800-4300K 5m/reel - JL-RCOB-480-40K-12V (50mm)
2pcs VMI32036 EXTENSION BOLT M4 L-20
2pcs VMI30913 COUNTERSUNK HEAD SCREW HEX SOCKET M4X8 DIN7991

01.06.2023 / TE (2004468)
23.05.2024 / TE (2005089)
23.09.2024 / HL (2005254 E-SUPPORT CASE)
24.10.2024 / TS (2005259)

Date of modification	Modified by	Description
14.10.2024	PF	C5: 2005259; S313 +200mm, pinbolts
5.1.2024	PF	B3: 2004980; ---
30.4.2024	PF	C4: 2005089; Light pack and MY25 changes

Date	23.5.2024
Drawing by	PF
Sheet rev.	5
Project rev.	C

NAVIX
Copyright by

Axopar Boat		38686 Product code	2004468 Project ID	
28 MK3 Boat model	SWITCH PANEL Title	HL Loc		81/ 106 Sheet

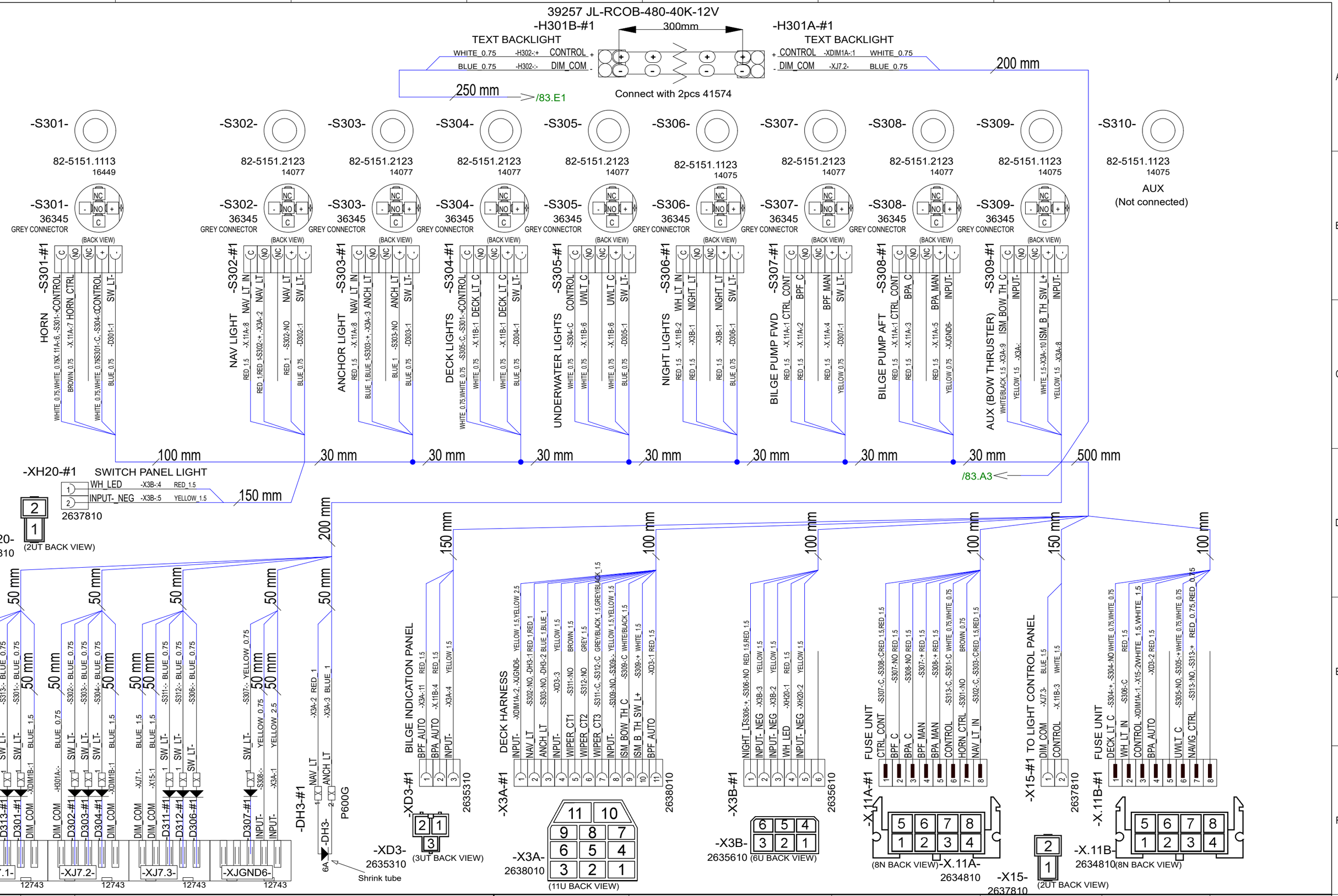

14.10.2024	PF	C5: 2005259; Helm lts->night lts, dimmer remv, S313 +200mm, pinbolts	Date	7.6.2023	Axopar		
5.1.2024	PF	B3: 2004980; ----------	Drawing by	PF	Boat	Sub-product code	39236 Product code	2004468 Project ID
30.4.2024	PF	C4: 2005089; Light pack and MY25 changes	Sheet rev.	5	28 MK3	SWITCH PANEL EXTENDED	HL	82 / 106
Date of modification	Modified by	Description	Project rev.	C	Boat model	Title	Loc	Sheet

NAVIX

Copyright by

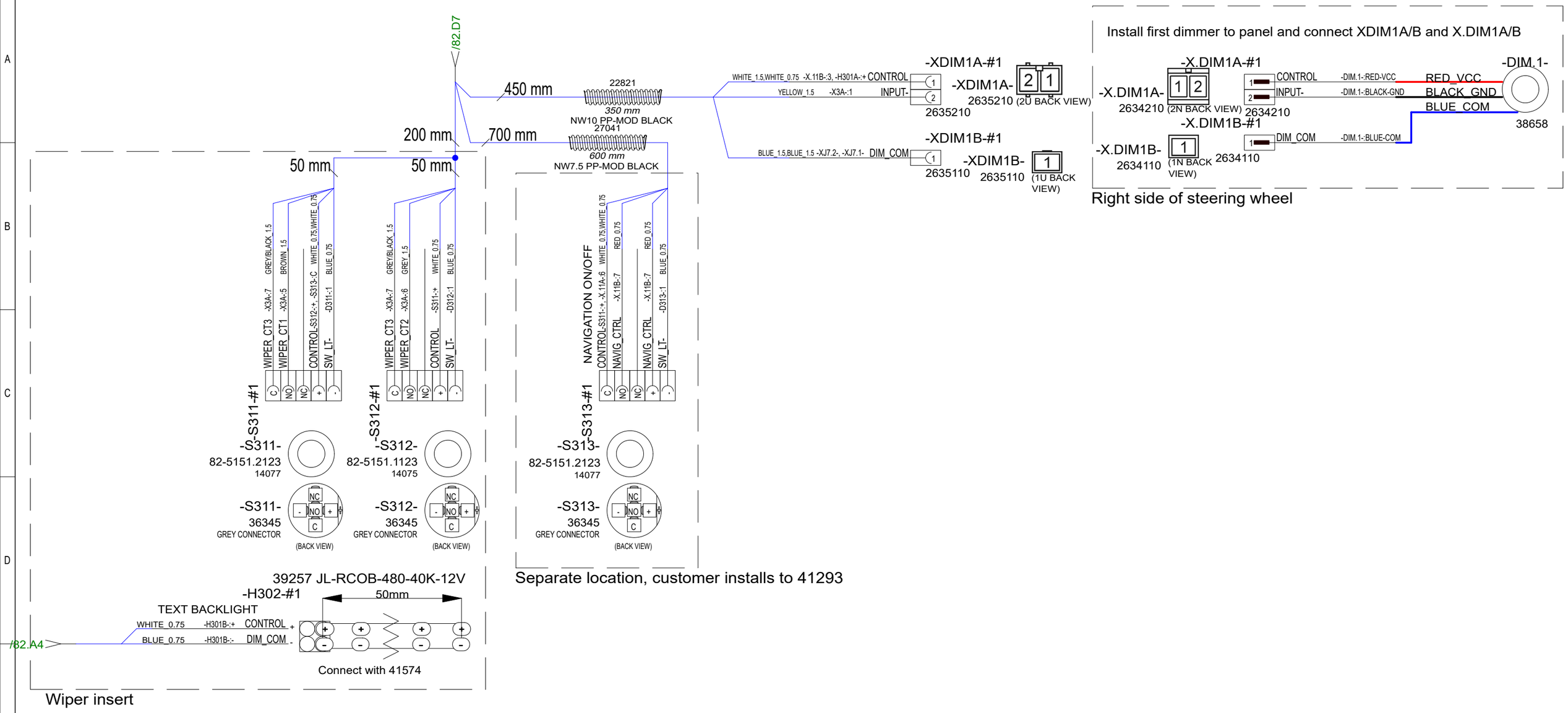

14.10.2024	PF	C5: 2005259; Helm lts->night lts, dimmer remv, S313 +200mm, pinbolts	Date	30.5.2023	NAVIX	Axopar		39236	2004468
5.1.2024	PF	B3: 2004980; ----------	Drawing by	PF		Boat	Sub-product code	Product code	Project ID
30.4.2024	PF	C4: 2005089; Light pack and MY25 changes	Sheet rev.	5		28 MK3	SWITCH PANEL EXTENDED	HL	83 / 106
Date of modification	Modified by	Description	Project rev.	C	Copyright by	Boat model	Title	Loc	Sheet

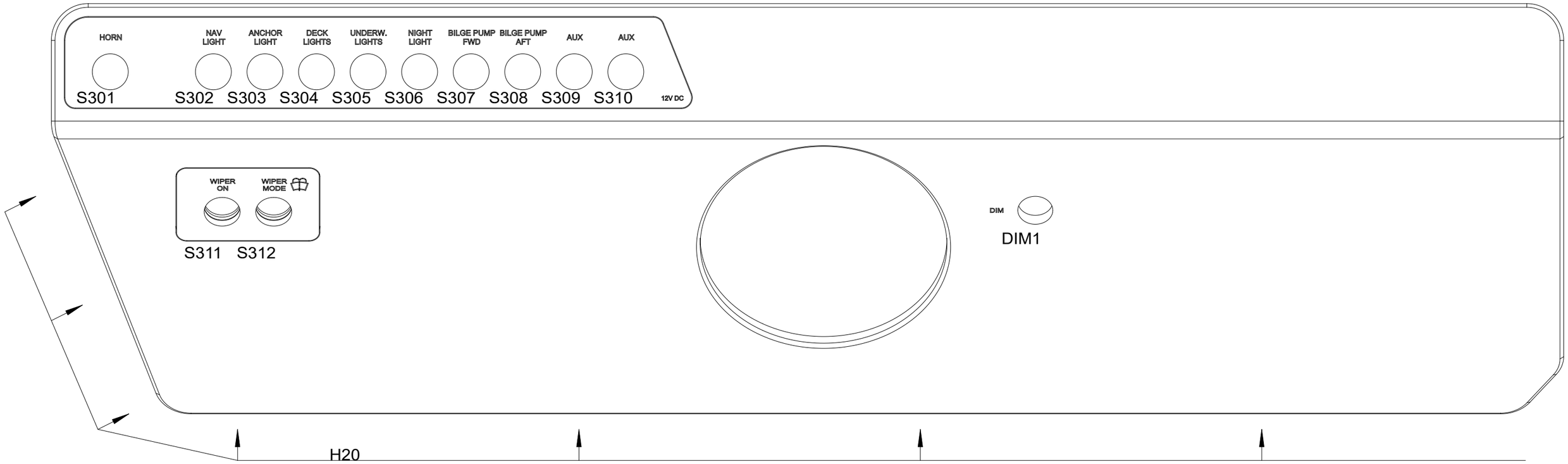

Connect to XH20 after installing to LED place

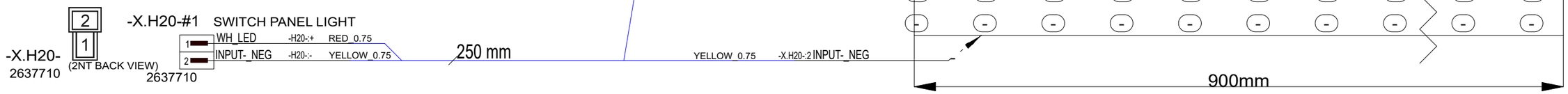

14.10.2024	PF	C5: 2005259; Helm lts->night lts, dimmer remv, S313 +200mm, pinbolts	Date	29.5.2023	NAVIX	Axopar		39236	2004468
5.1.2024	PF	B3: 2004980; ----------	Drawing by	PF		Boat	Sub-product code	Product code	Project ID
30.4.2024	PF	C4: 2005089; Light pack and MY25 changes	Sheet rev.	5		28 MK3	SWITCH PANEL EXTENDED	HL	84 / 106
Date of modification	Modified by	Description	Project rev.	C	Copyright by	Boat model	Title	Loc	Sheet

39236_AXOPAR_28_SWITCH_PANEL_EXTENDED

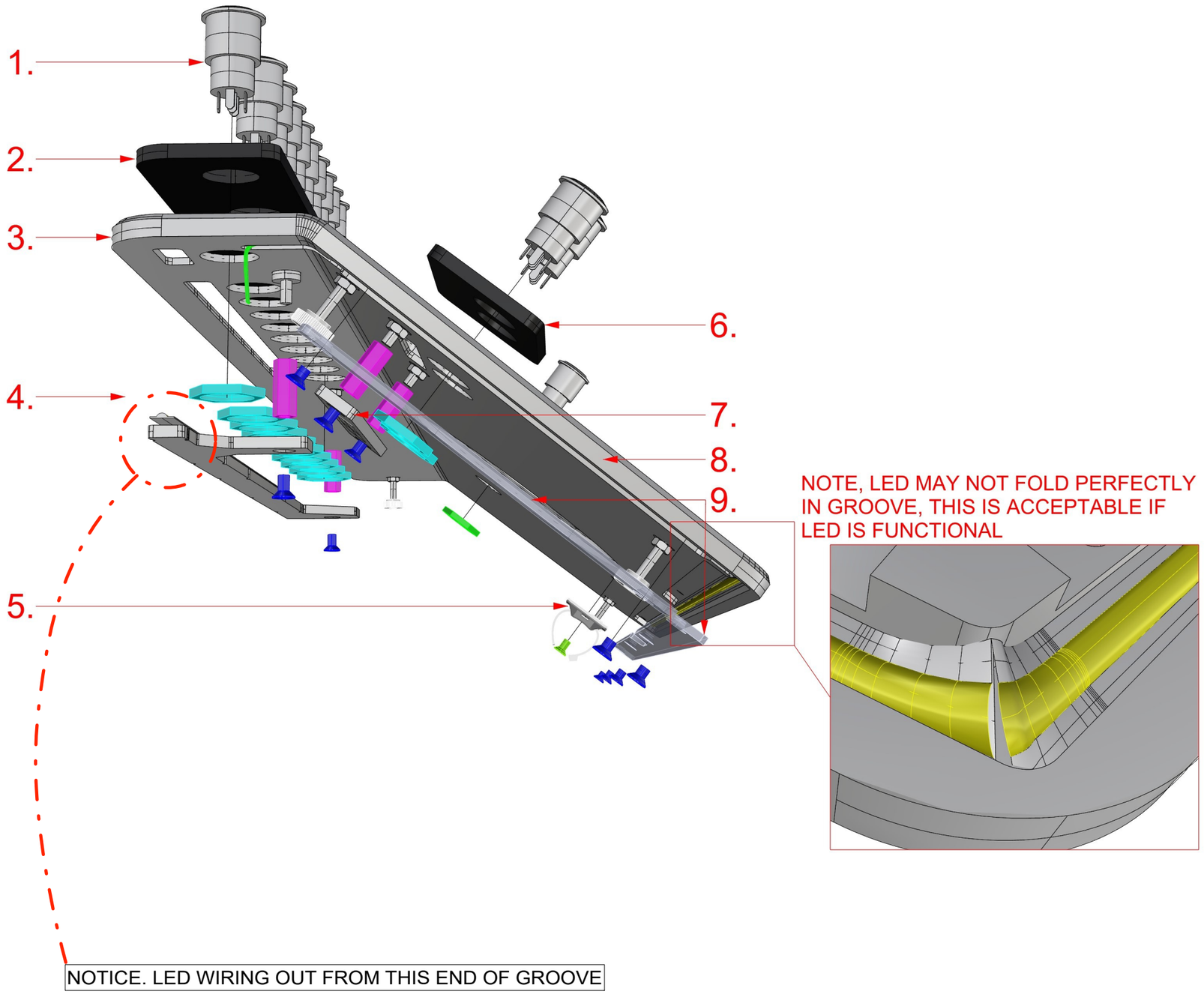

39236_AXOPAR_28_SWITCH_PANEL_EXTENDED

1. 13PCS HALO SWITCH (AS IN DIAGRAM)

2. 1PC
42670_AXOPAR_28_MK3_SWITCH_PANEL_EXT_INSERT_PORT_V1

3. 1PC 39240_AXOPAR_28_SWITCH_PANEL_EXT_BASE_V3

4. 1PC 41504_AXOPAR_28_SWITCH_PANEL_LED_HOLDER_LONG_V2
 39257 - LED-Strip RCOB 12V 3800-4300K 5m/reel - JL-RCOB-480-40K-12V (300mm)
 2pcs VMI32036 EXTENSION BOLT M4 L-20
 2pcs VMI30913 COUNTERSUNK HEAD SCREW HEX SOCKET M4X8 DIN7991

5. 1PC VMI36559 - Self Adhesive Black Cable Tie Mount 5,3mm
 VMI30913 - Countersunk head Screw HEX socket M4X8 DIN7991

6. 1PC 41485_AXOPAR_28_SWITCH_PANEL_INSERT_2_PORT

7. 1PC 41505_AXOPAR_28_SWITCH_PANEL_LED_HOLDER_SHORT
 39257 - LED-Strip RCOB 12V 3800-4300K 5m/reel - JL-RCOB-480-40K-12V (50mm)
 2pcs VMI32036 EXTENSION BOLT M4 L-20
 2pcs VMI30913 COUNTERSUNK HEAD SCREW HEX SOCKET M4X8 DIN7991

8. 1PC LED (AS IN DIAGRAM)

9. 1PC 39241_AXOPAR_28_SWITCH_PANEL_EXT_COVER
 6PCS VMI30912 - Countersunk Screw HEX socket head M4X6 DIN7991
 DO NOT OVER TIGHTEN

01.06.2023 / TE (2004468)
23.05.2024 / TE (2005089)
23.09.2024 / HL (2005254 E-SUPPORT CASE)
24.10.2024 / TS (2005259)

Date of modification	Modified by	Description
14.10.2024	PF	C5: 2005259; Helm lts->night lts, dimmer remv, S313 +200mm, pinbolts
5.1.2024	PF	B3: 2004980; ----------
30.4.2024	PF	C4: 2005089; Light pack and MY25 changes

Date	24.4.2024
Drawing by	PF
Sheet rev.	5
Project rev.	C

NAVIX
Copyright by

Axopar Boat		39236 Product code	2004468 Project ID
28 MK3 Boat model	SWITCH PANEL EXTENDED Title	HL Loc	85 / 106 Sheet

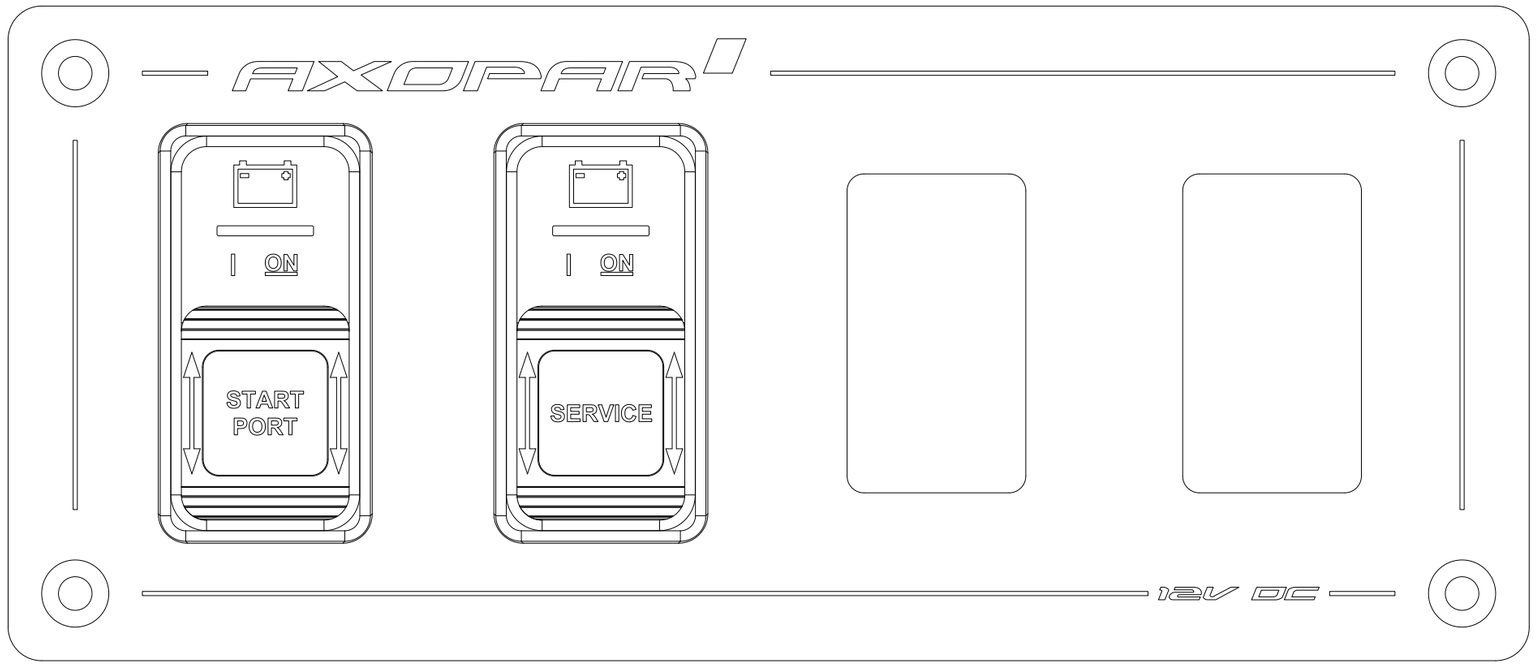

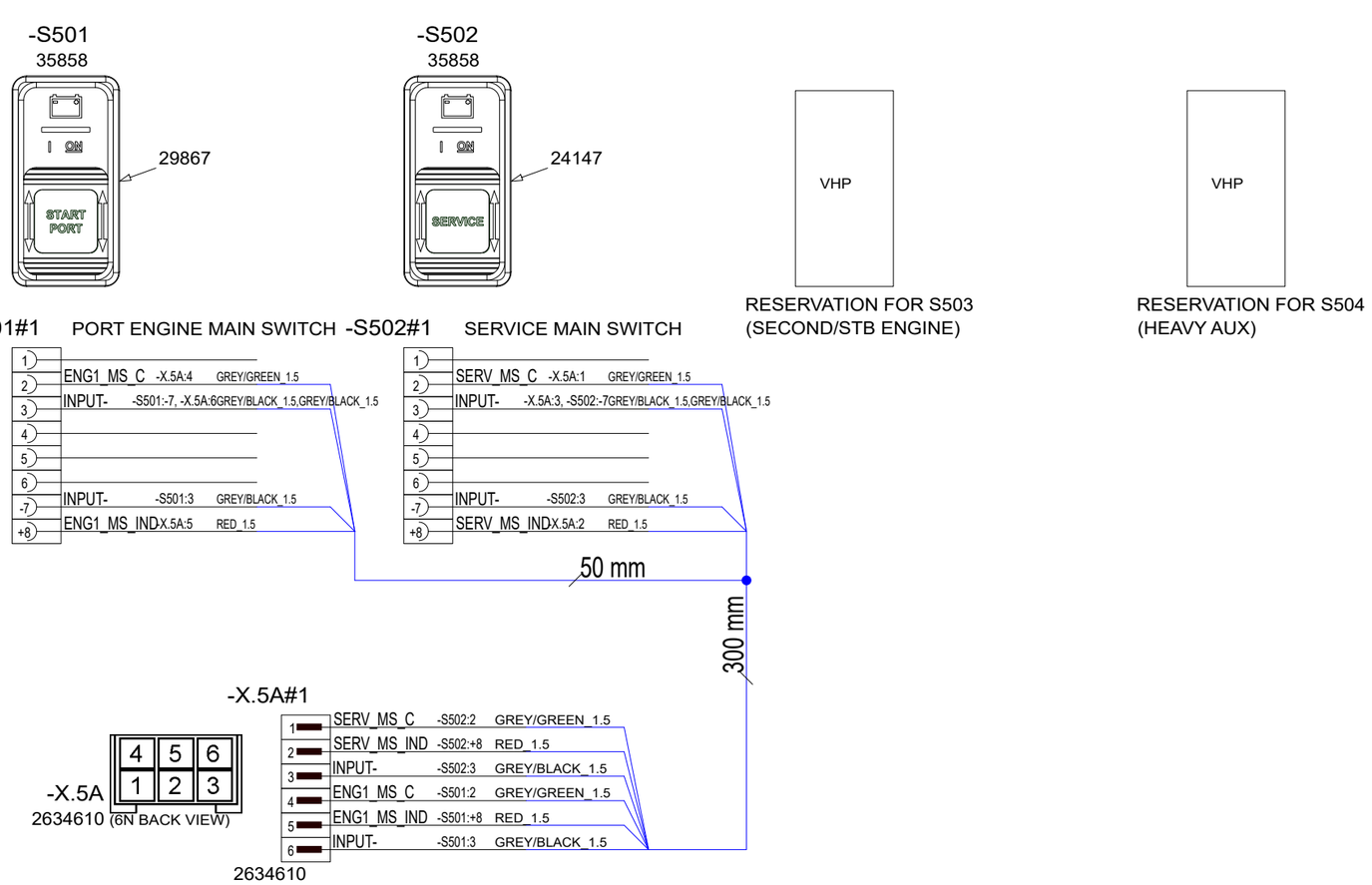

14.5.2024	PF	C1: 2005089; Not modified	Date	27.3.2023	NAVIX	Axopar Boat		38687 Product code	2004468 Project ID
			Drawing by	PF		28 MK3 Boat model	MAIN SWITCH CONTROL PANEL Title	HL	
			Sheet rev.	1				Loc	86 / 106 Sheet
Date of modification	Modified by	Description	Project rev.	C	Copyright by		Sub-product code		

38687_AXOPAR_28_MAIN_SWITCH_CONTROL_PANEL

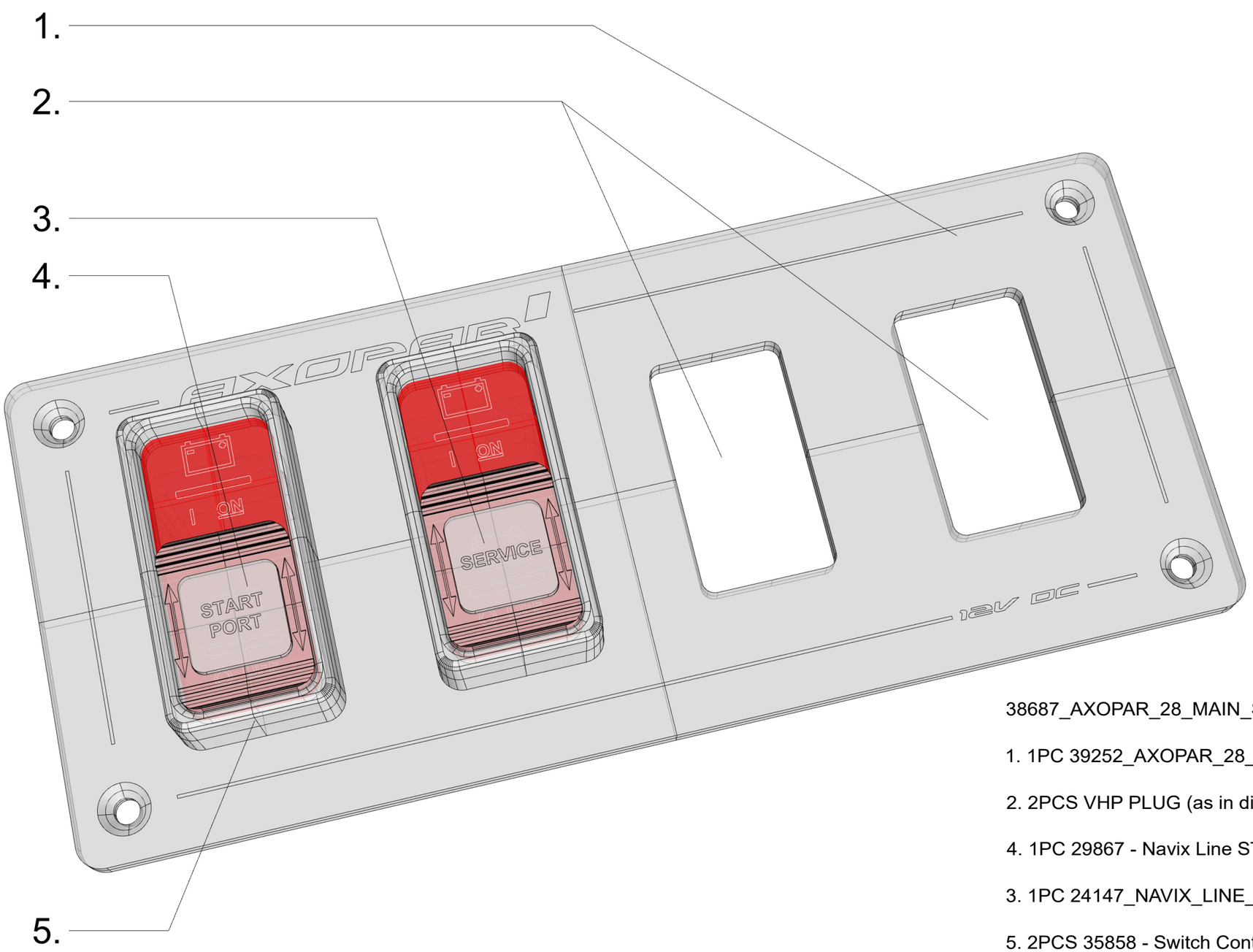

38687_AXOPAR_28_MAIN_SWITCH_CONTROL_PANEL

1. 1PC 39252_AXOPAR_28_MAIN_SW_CONTROL_PANEL_(WOC)

2. 2PCS VHP PLUG (as in diagram)

4. 1PC 29867 - Navix Line START PORT LABEL FOR 16756 SPDT -

3. 1PC 24147_NAVIX_LINE_SERVICE_LABEL_FOR_16756_SPDT

5. 2PCS 35858 - Switch Contura SPDT -ON-ON - Blue Sea 2155B-BSS (as in diagram)

01.06.-23 / TE (2004468)

14.5.2024	PF	C1: 2005089; Not modified	Date	8.5.2023	NAVIX	Axopar Boat		38687 Product code	2004468 Project ID
			Drawing by	PF		28 MK3 Boat model	MAIN SWITCH CONTROL PANEL Title	HL Loc	87 / 106 Sheet
			Sheet rev.	1					
Date of modification	Modified by	Description	Project rev.	C	Copyright by				

PLACEMENT OF ELECTRICAL COMPONENTS

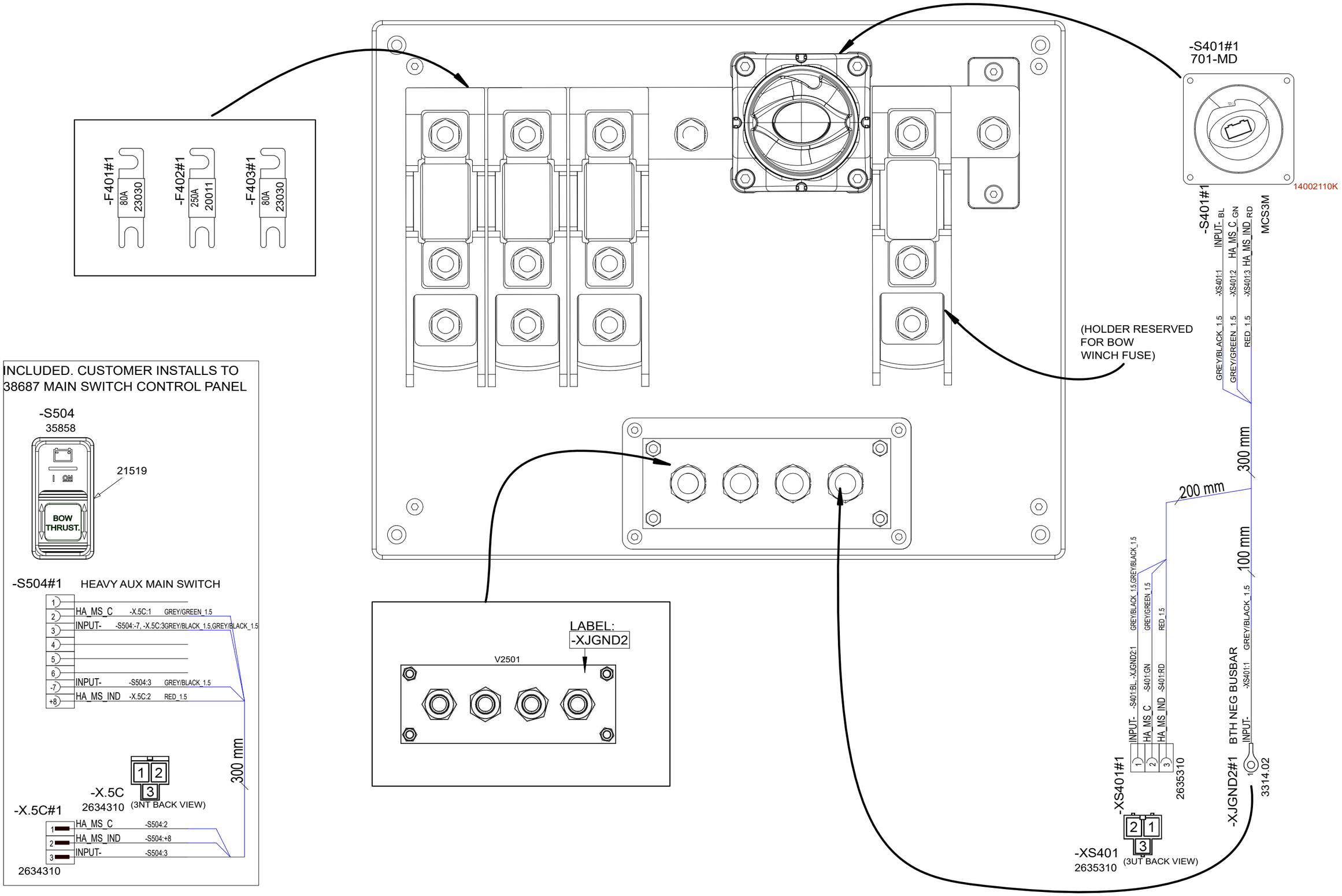

9.8.2024	PF	C3: 2005089; Wire lenght changes	Date	8.5.2023	NAVIX	Axopar		38688	2004468
		B2: Not modified	Drawing by	PF		Boat	Sub-product code	Product code	Project ID
30.4.2024	PF	C2: 2005089; Not modified	Sheet rev.	3		28 MK3	BOW THRUSTER UNIT	HL	88 / 106
Date of modification	Modified by	Description	Project rev.	C	Copyright by	Boat model	Title	Loc	Sheet

PANEL ASSEMBLY

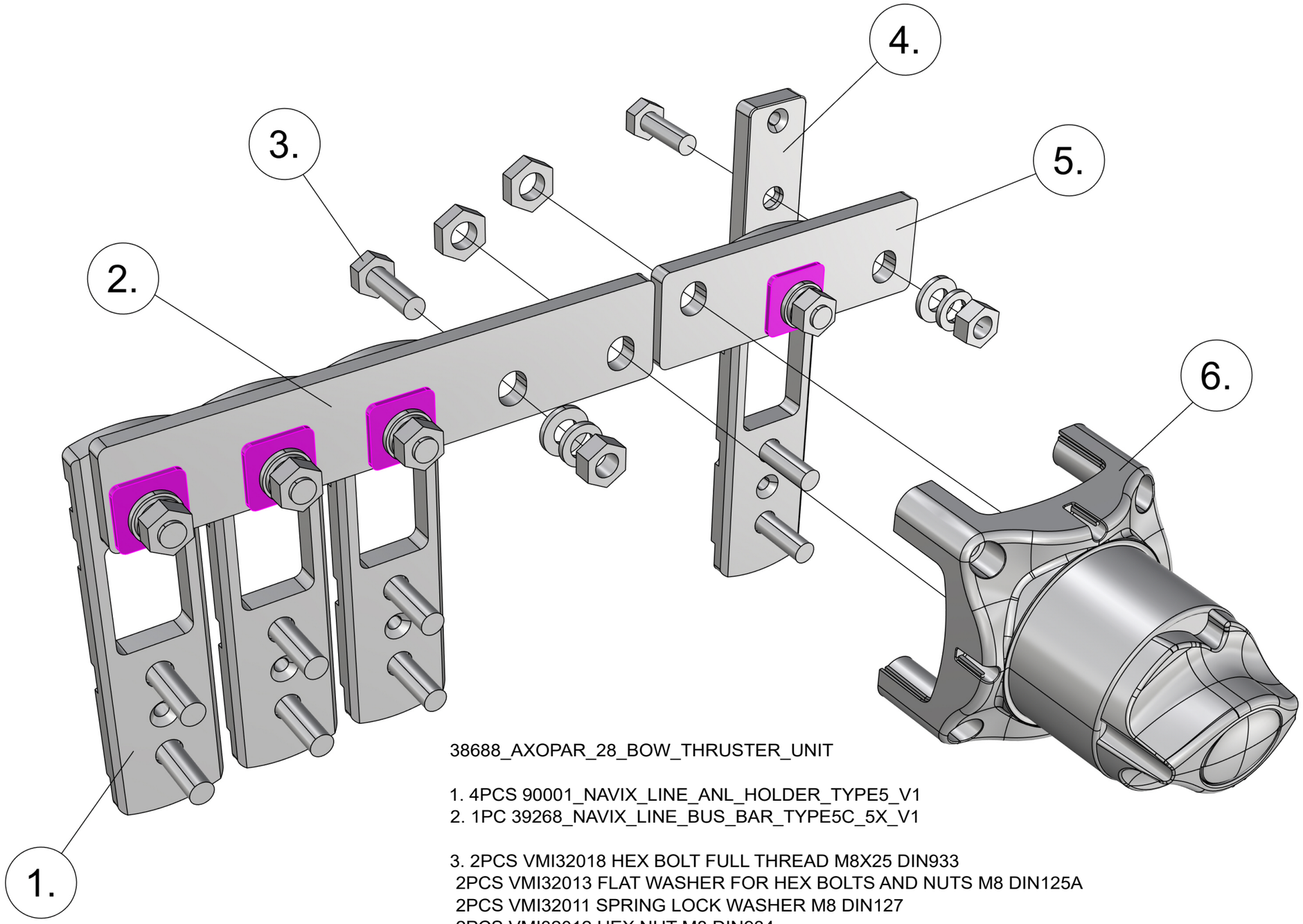

38688_AXOPAR_28_BOW_THRUSTER_UNIT

1. 4PCS 90001_NAVIX_LINE_ANL_HOLDER_TYPE5_V1
2. 1PC 39268_NAVIX_LINE_BUS_BAR_TYPE5C_5X_V1

3. 2PCS VMI32018 HEX BOLT FULL THREAD M8X25 DIN933
 2PCS VMI32013 FLAT WASHER FOR HEX BOLTS AND NUTS M8 DIN125A
 2PCS VMI32011 SPRING LOCK WASHER M8 DIN127
 2PCS VMI32012 HEX NUT M8 DIN934

4. 1PC 39048_NAVIX_LINE_BOLT_BASE_1X
5. 1PC 39269_NAVIX_LINE_BUS_BAR_TYPE5_BEP_RIGHT_2X_V1
6. - (AS IN DIAGRAM)

9.8.2024	PF	C3: 2005089; Wire lenght changes	Date 1.6.2023	NAVIX	Axopar			
		B2: Not modified	Drawing by PF		Boat	Sub-product code	38688 Product code	2004468 Project ID
30.4.2024	PF	C2: 2005089; Not modified	Sheet rev. 3		28 MK3	BOW THRUSTER UNIT	HL	89 / 106
Date of modification	Modified by	Description	Project rev. C	Copyright by	Boat model	Title	Loc	Sheet

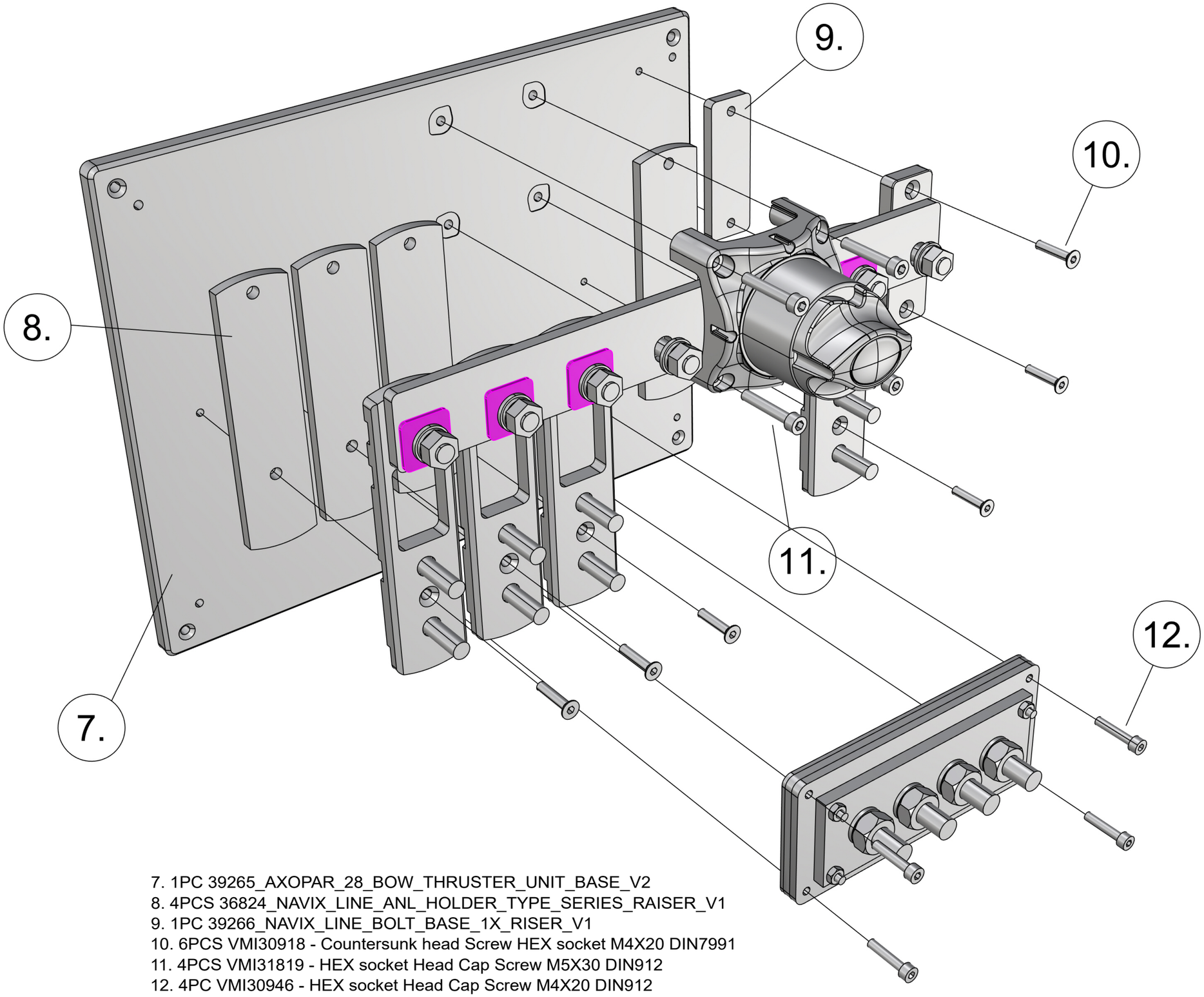

7. 1PC 39265_AXOPAR_28_BOW_THRUSTER_UNIT_BASE_V2
8. 4PCS 36824_NAVIX_LINE_ANL_HOLDER_TYPE_SERIES_RAISER_V1
9. 1PC 39266_NAVIX_LINE_BOLT_BASE_1X_RISER_V1
10. 6PCS VMI30918 - Countersunk head Screw HEX socket M4X20 DIN7991
11. 4PCS VMI31819 - HEX socket Head Cap Screw M5X30 DIN912
12. 4PC VMI30946 - HEX socket Head Cap Screw M4X20 DIN912

9.8.2024	PF	C3: 2005089; Wire lenght changes	Date 1.6.2023	NAVIX	Axopar			
		B2: Not modified	Drawing by PF		Boat	Sub-product code	38688 Product code	2004468 Project ID
30.4.2024	PF	C2: 2005089; Not modified	Sheet rev. 3		28 MK3	BOW THRUSTER UNIT	HL	90 / 106
Date of modification	Modified by	Description	Project rev. C	Copyright by	Boat model	Title	Loc	Sheet

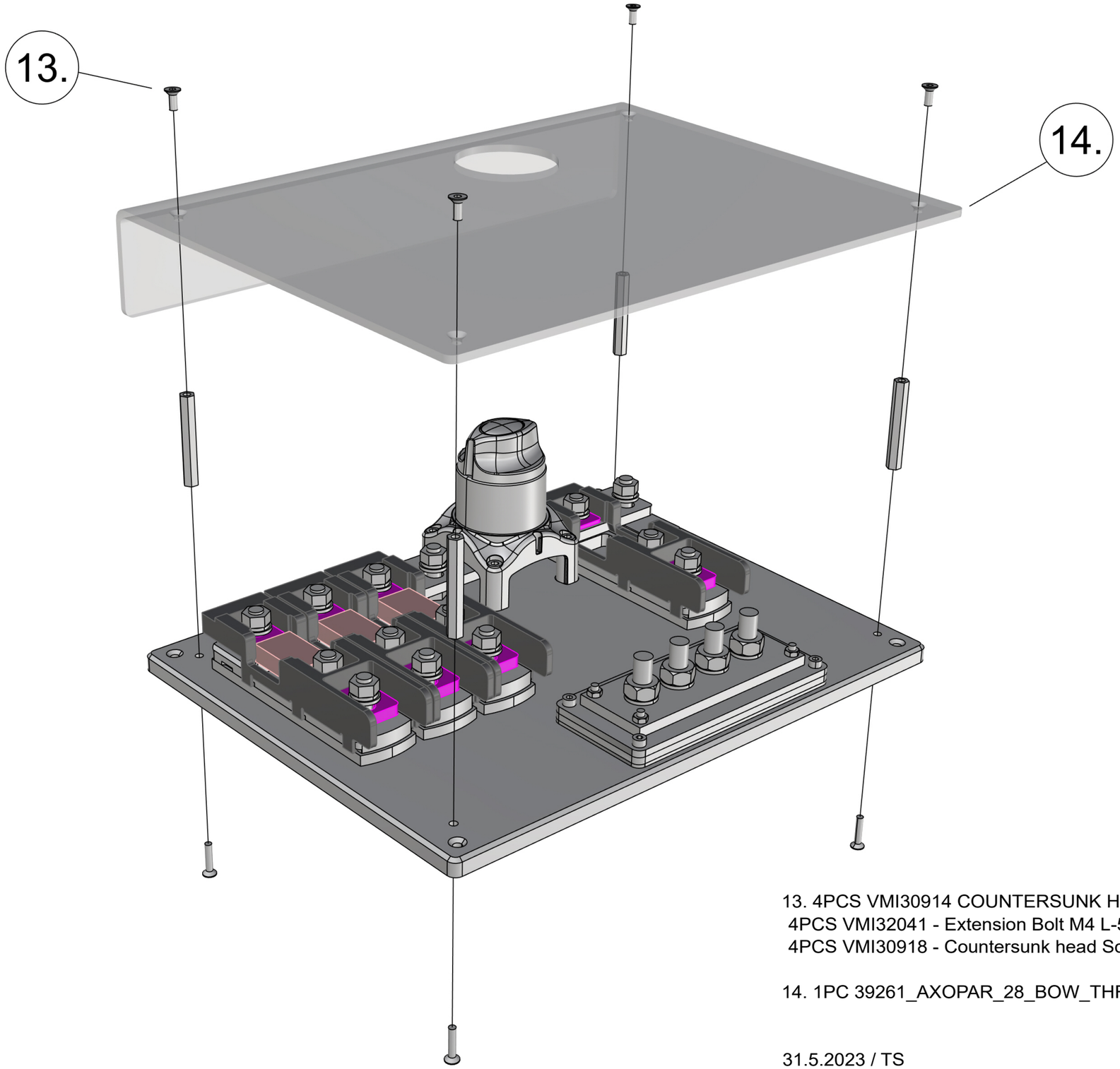

13. 4PCS VMI30914 COUNTERSUNK HEAD SCREW HEX SOCKET M4X10 DIN7991
4PCS VMI32041 - Extension Bolt M4 L-50
4PCS VMI30918 - Countersunk head Screw HEX socket M4X20 DIN7991

14. 1PC 39261_AXOPAR_28_BOW_THRUSTER_UNIT_COVER_V2

31.5.2023 / TS
19.10.2023 / TS (2004800)

Date of modification	Modified by	Description
9.8.2024	PF	C3: 2005089; Wire lenght changes
		B2: Not modified
30.4.2024	PF	C2: 2005089; Not modified

Date	1.6.2023
Drawing by	PF
Sheet rev.	3
Project rev.	C

NAVIX
Copyright by

Axopar Boat	Sub-product code	38688 Product code	2004468 Project ID
28 MK3 Boat model	BOW THRUSTER UNIT Title	HL Loc	91/ 106 Sheet

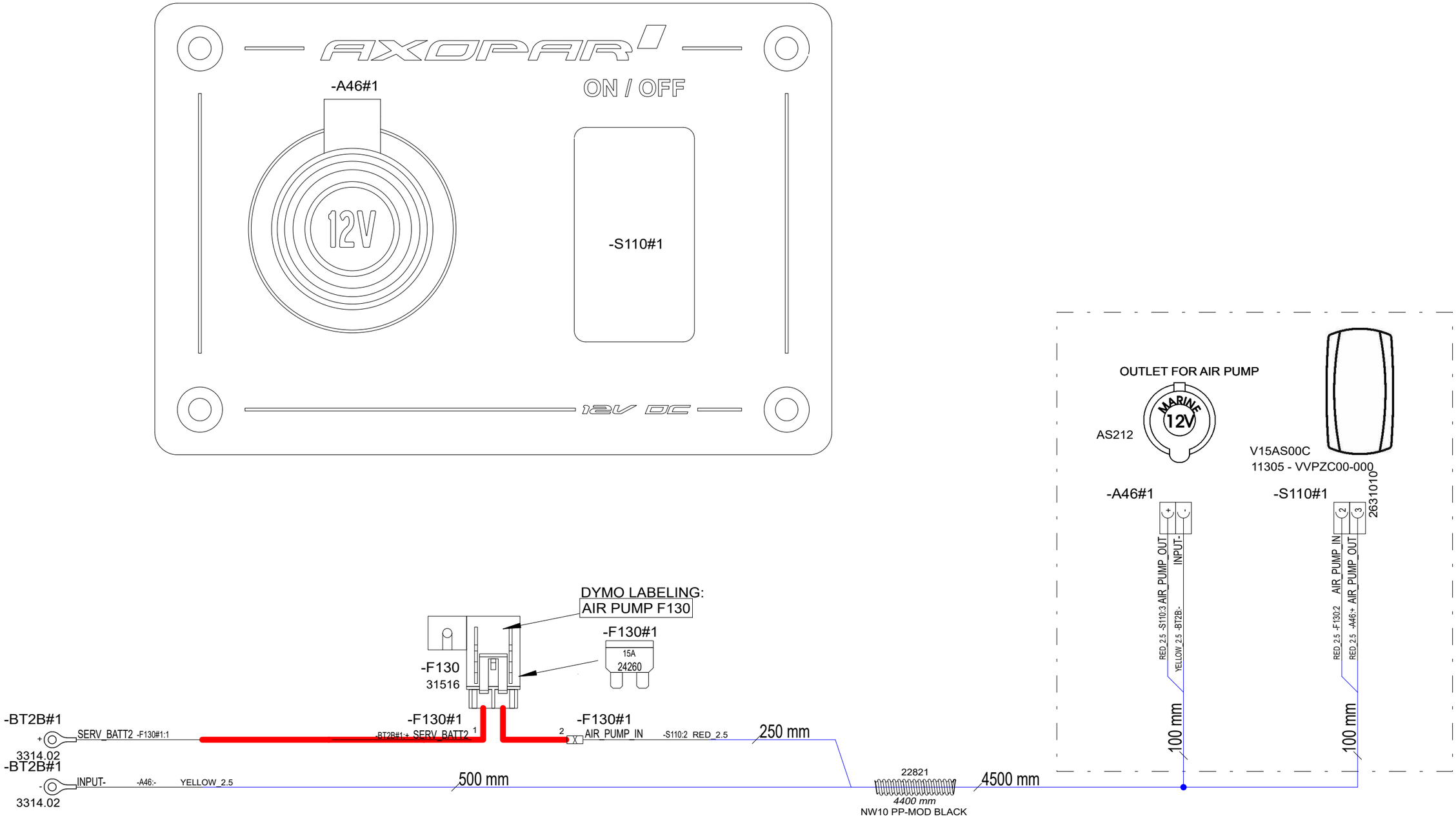

9.8.2024	PF	C3: 2005089; Length +1500mm	Date	15.12.2023	NAVIX	Axopar	40527	40505	2004468
		B1: Not modified	Drawing by	PF		Boat	Sub-product code	Product code	Project ID
30.4.2024	PF	C2: 2005089; Fuse wiring modified	Sheet rev.	3		28 MK3	12V OUTLET AIRCOMP PANEL	HL	92 / 106
Date of modification	Modified by	Description	Project rev.	C	Copyright by	Boat model	Title	Loc	Sheet

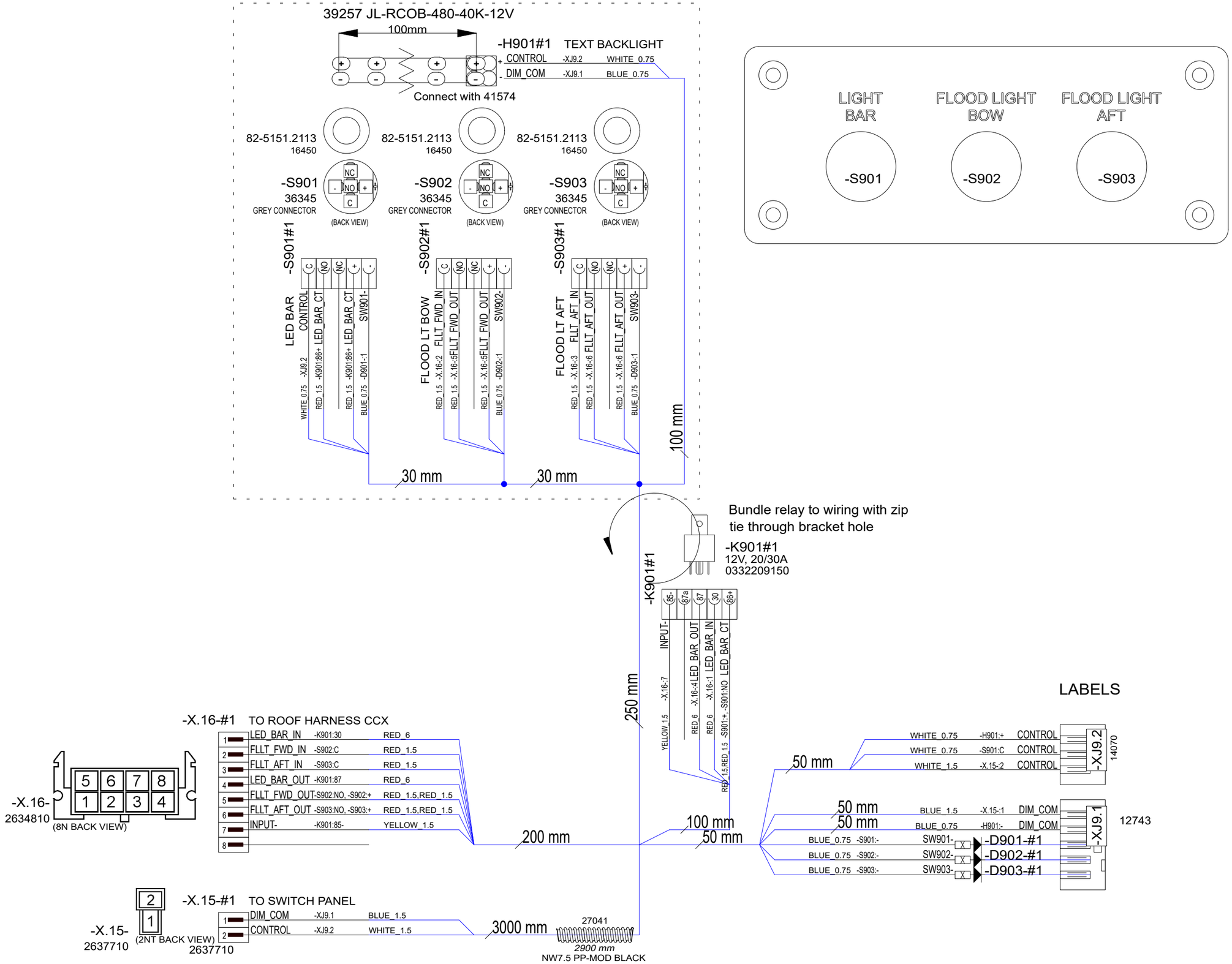

6.5.2024	PF	C1: 2005089; New product	Date	30.4.2024	NAVIX	Axopar		41388	2004468
			Drawing by	PF		Boat	Sub-product code	Product code	Project ID
			Sheet rev.	1		28 MK3	CCX LIGHT CONTROL PANEL	HL	93 / 106
Date of modification	Modified by	Description	Project rev.	C	Copyright by	Boat model	Title	Loc	Sheet

41388_AXOPAR_28_MK3_LIGHT_CONTROL_PANEL

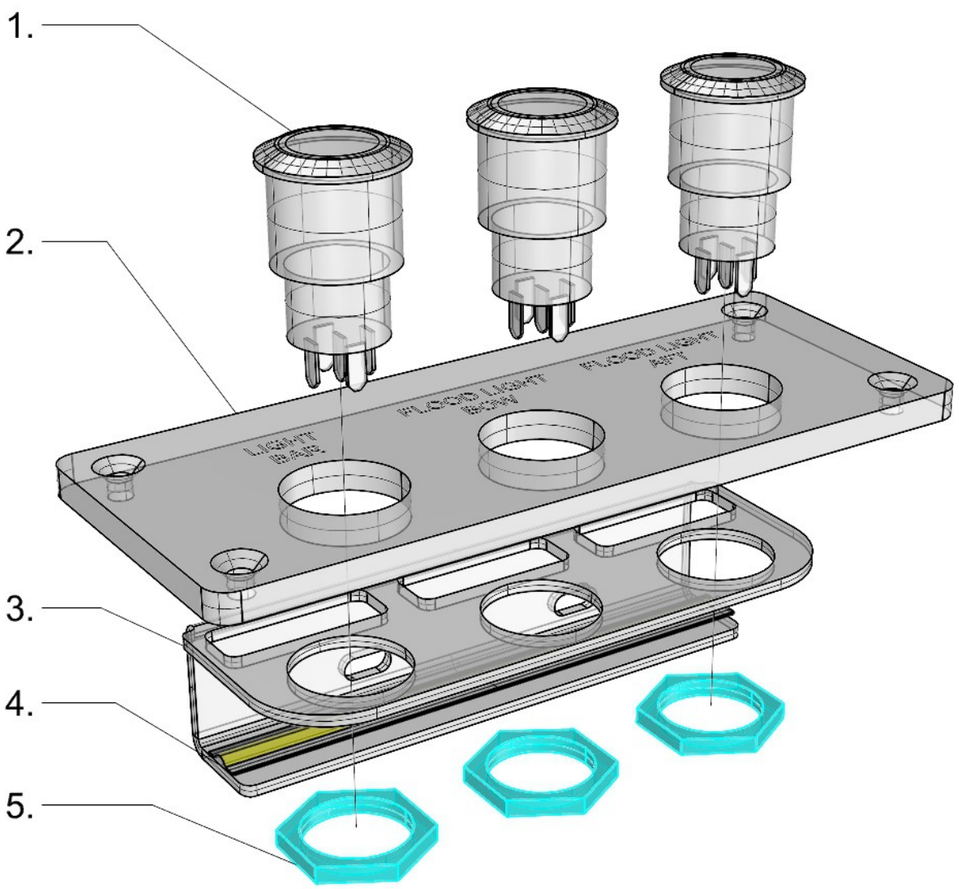

41388_AXOPAR_28_MK3_LIGHT_CONTROL_PANEL

1. 3PCS HALO SWITCH (AS IN DIAGRAM)

2. 1PC 41595_AXOPAR_28_MK3_LIGHT_CONTROL_PANEL_(WOC)

3. 1PC 41596_AXOPAR_28_MK3_LIGHT_CONTROL_PANEL_LED_BRACKET

4. 1PC 39257 - LED-Strip RCOB 12V 3800-4300K 5m/reel - JL-RCOB-480-40K-12V (100mm)

5. 3PCS HALO SWITCH NUT

23.05.2024 / TE (2005089)

Date of modification	Modified by	Description
6.5.2024	PF	C1: 2005089; New product

Date	23.5.2024
Drawing by	PF
Sheet rev.	1
Project rev.	C

NAVIX

Copyright by

Axopar Boat		41388 Product code	2004468 Project ID
28 MK3 Boat model	CCX LIGHT CONTROL PANEL Title	HL Loc	94 / 106 Sheet

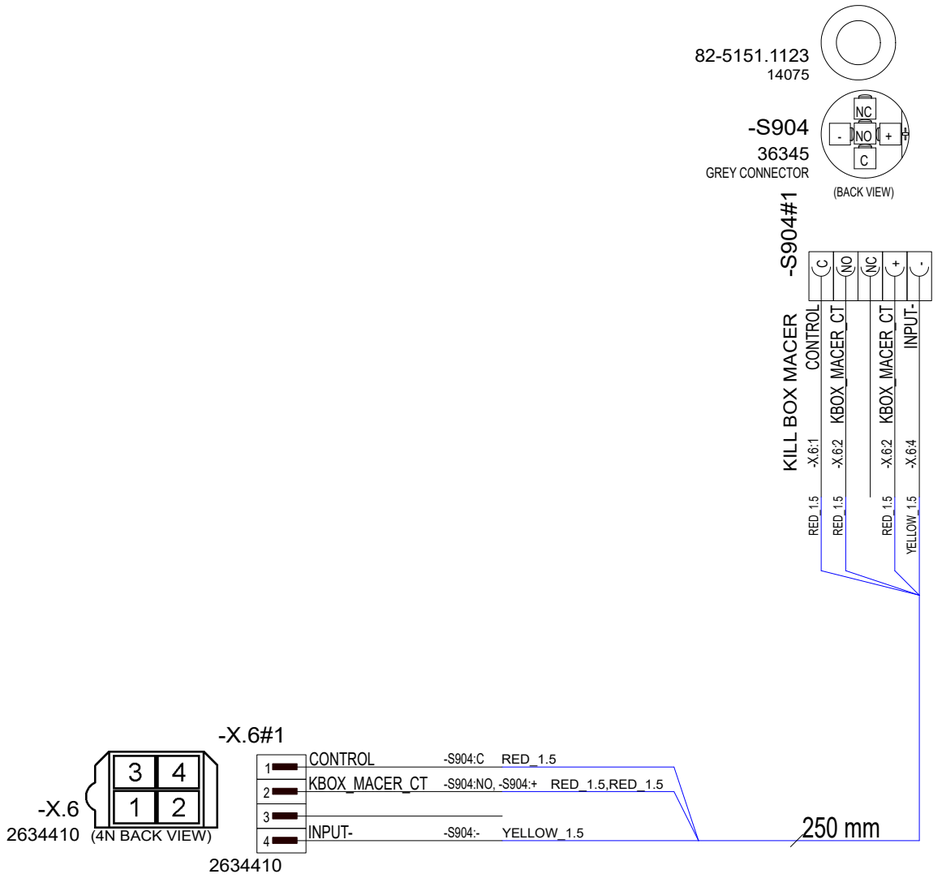

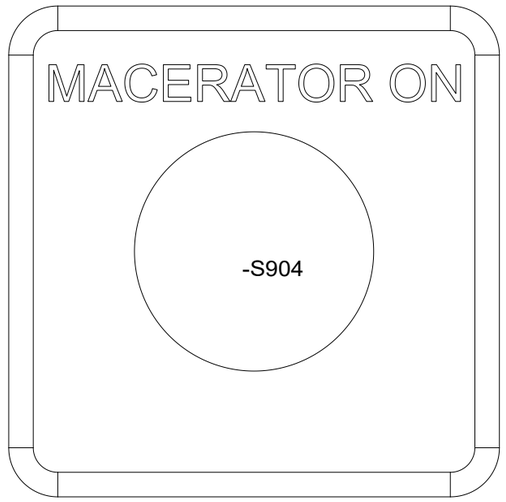

6.5.2024	PF	C1: 2005089; New product	Date	6.5.2024	NAVIX	Axopar	41584	41386	2004468
			Drawing by	PF		Boat	Sub-product code	Product code	Project ID
			Sheet rev.	1		28 MK3	CCX MACERATOR PANEL	HL	95 / 106
Date of modification	Modified by	Description	Project rev.	C	Copyright by	Boat model	Title	Loc	Sheet

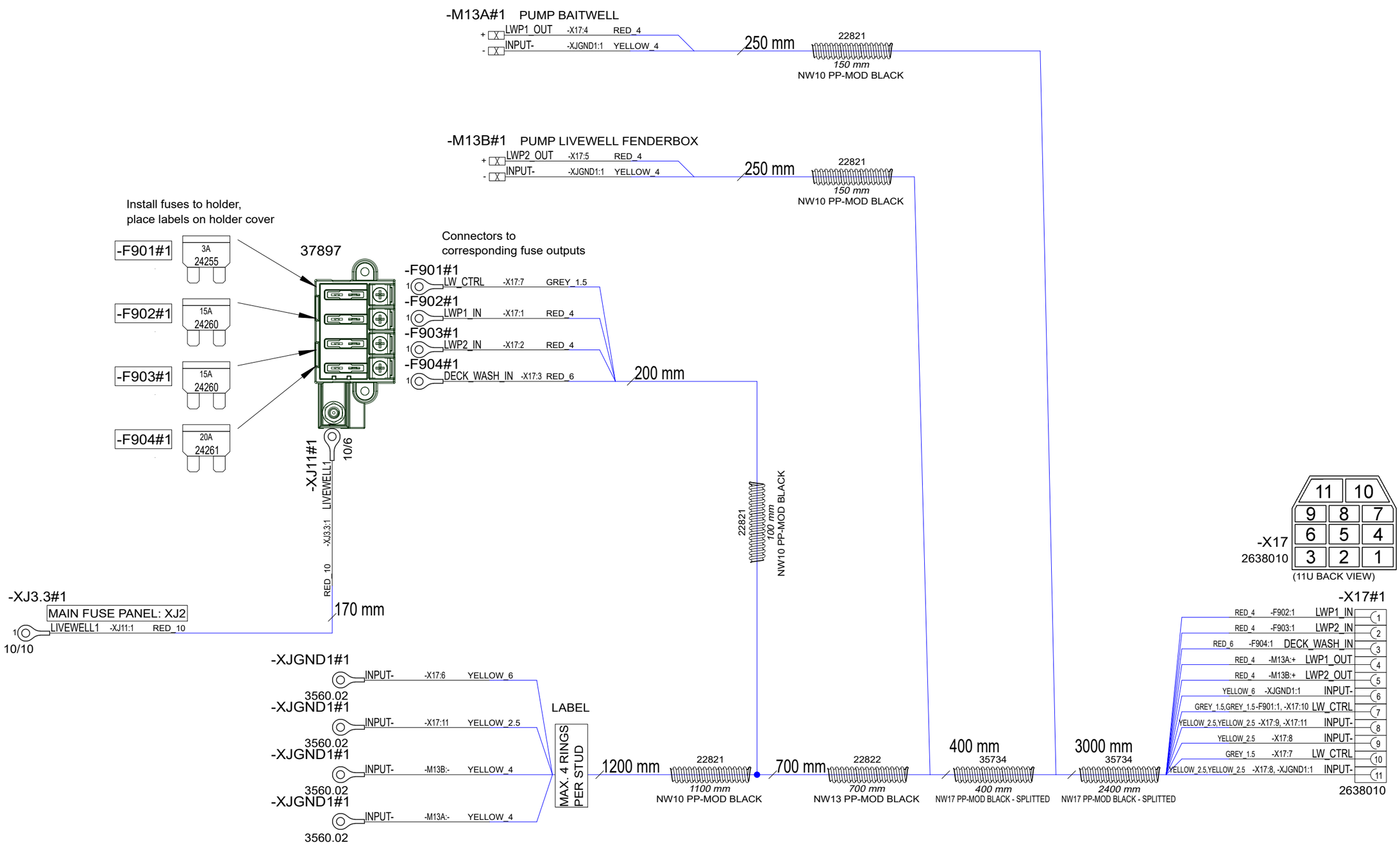

Date of modification	Modified by	Description
6.5.2024	PF	C1: 2005089; New product
14.10.2024	PF	C2: 2005259; X18 added, relay type, M13C->M15 dwash, sw order, lengths

Date	6.5.2024
Drawing by	PF
Sheet rev.	2
Project rev.	C

NAVIX
Copyright by

Axopar Boat		41387 Product code	2004468 Project ID
28 MK3 Boat model	CCX LIVEWELL CONTROL PANEL Title	HL Loc	96 / 106 Sheet

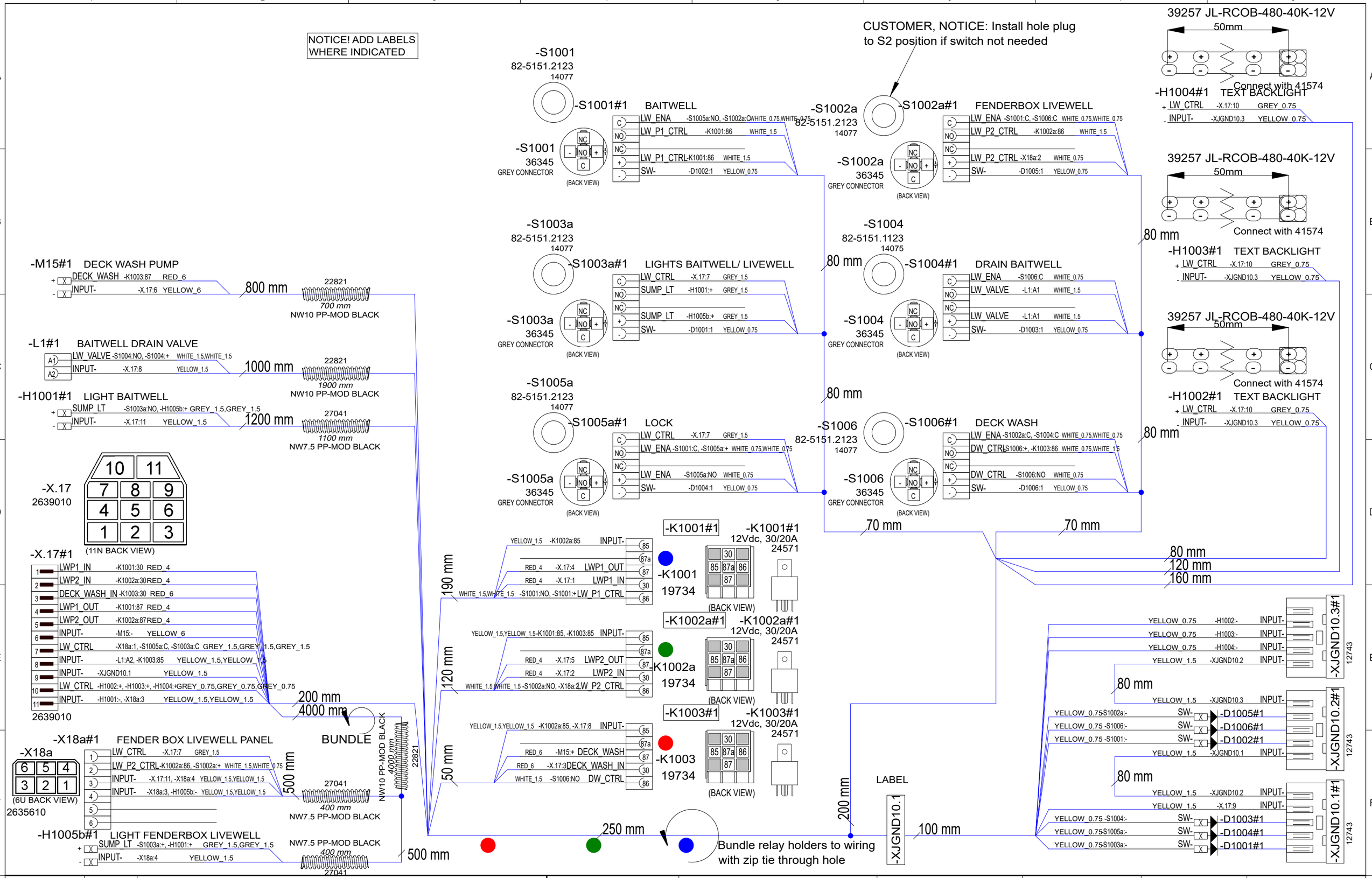

Date of modification	Modified by	Description
6.5.2024	PF	C1: 2005089; New product
14.10.2024	PF	C2: 2005259; X18 added, relay type, M13C->M15 dwash, sw order, lengths

Date	6.5.2024
Drawing by	PF
Sheet rev.	2
Project rev.	C

NAVIX
Copyright by

Axopar Boat	Sub-product code	41387 Product code	2004468 Project ID
28 MK3 Boat model	CCX LIVEWELL CONTROL PANEL Title	HL Loc	97 / 106 Sheet

41387_AXOPAR_28_MK3_LIVEWELL_CONTROL_PANEL

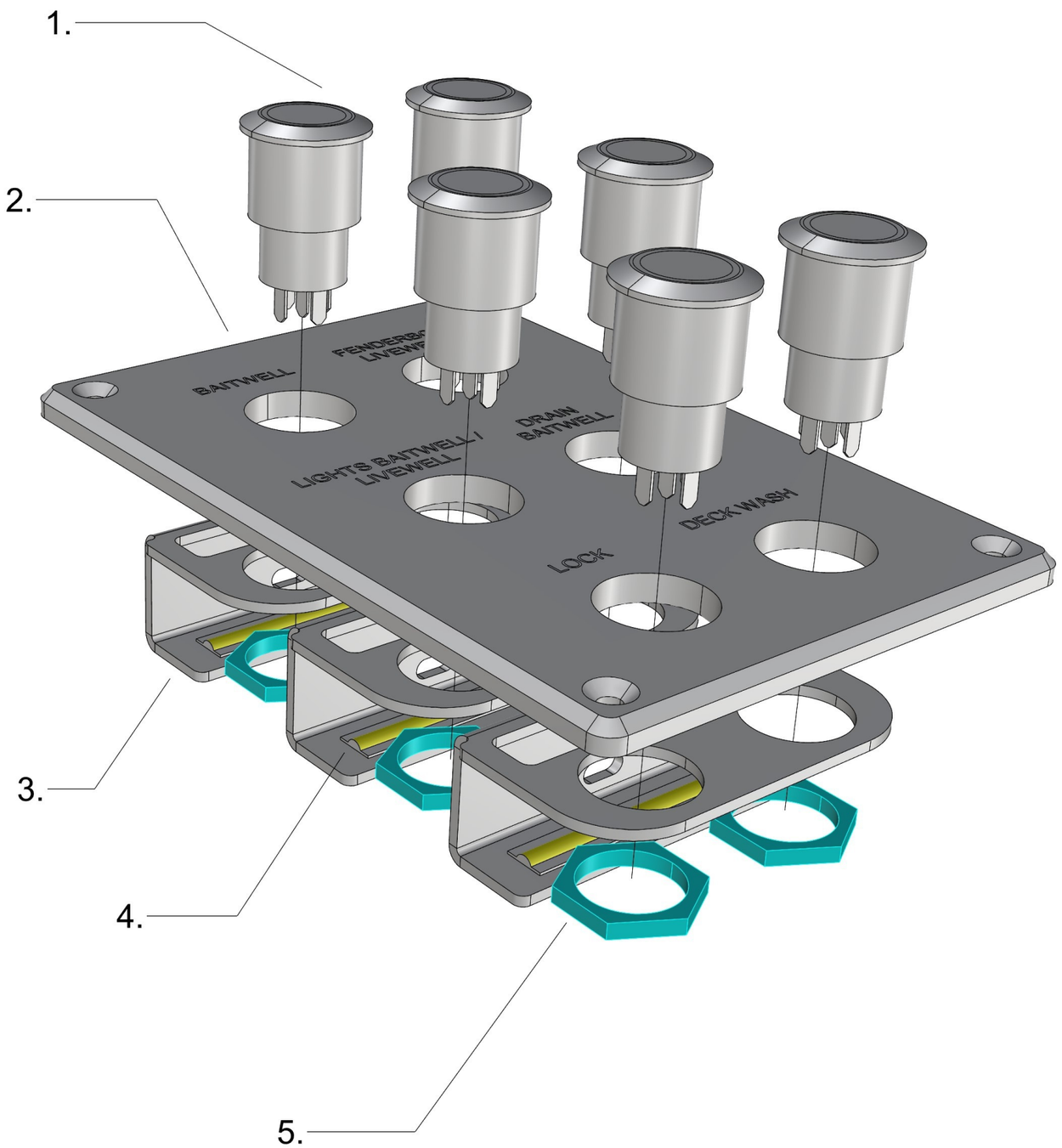

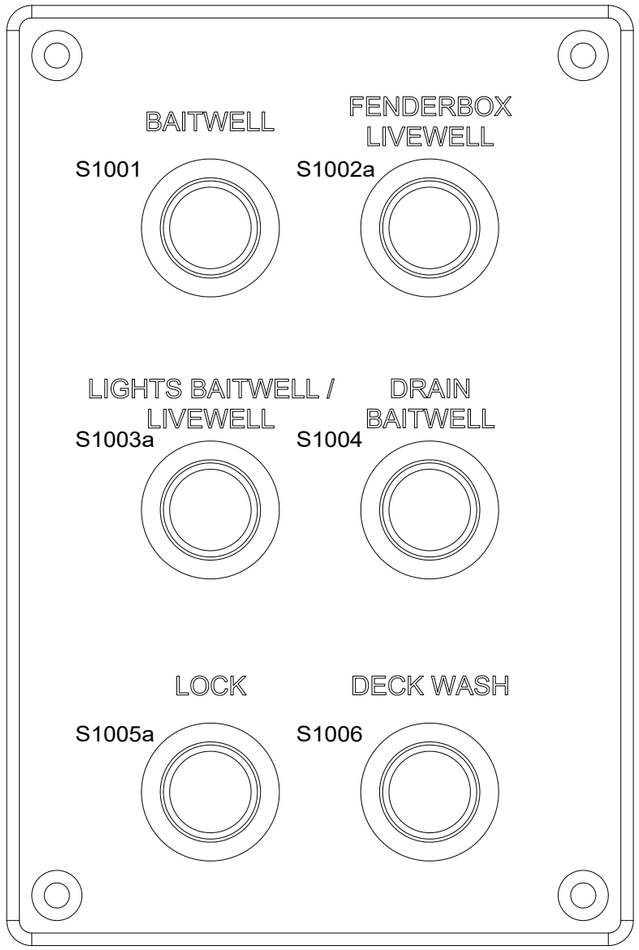

41387_AXOPAR_28_MK3_LIVEWELL_CONTROL_PANEL

1. 6PCS HALO SWITCH (AS IN DIAGRAM)

2. 1PC 41597_AXOPAR_28_MK3_LIVEWELL_CONTROL_PANEL_(WOC)_V2

3. 3PCS 41598_AXOPAR_28_MK3_LIVEWELL_CONTROL_PANEL_LED_BRACKET_V1

4. 3PCS 39257 - LED-Strip RCOB 12V 3800-4300K 5m/reel - JL-RCOB-480-40K-12V (50mm)

5. 6PCS HALO SWITCH NUT

1PC INCLUDE IN SHIPMENT!
35534 - Hole Plug, Ø19,1 mm

23.05.2024 / TE (2005089)
24.10.2024 / TS (2005259)

Date of modification	Modified by	Description
6.5.2024	PF	C1: 2005089; New product
14.10.2024	PF	C2: 2005259; X18 added, relay type, M13C->M15 dwash, sw order, lengths

Date	30.5.2024
Drawing by	PF
Sheet rev.	2
Project rev.	C

NAVIX
Copyright by

Axopar Boat		41387 Product code	2004468 Project ID
28 MK3 Boat model	CCX LIVEWELL CONTROL PANEL Title	HL Loc	98 / 106 Sheet

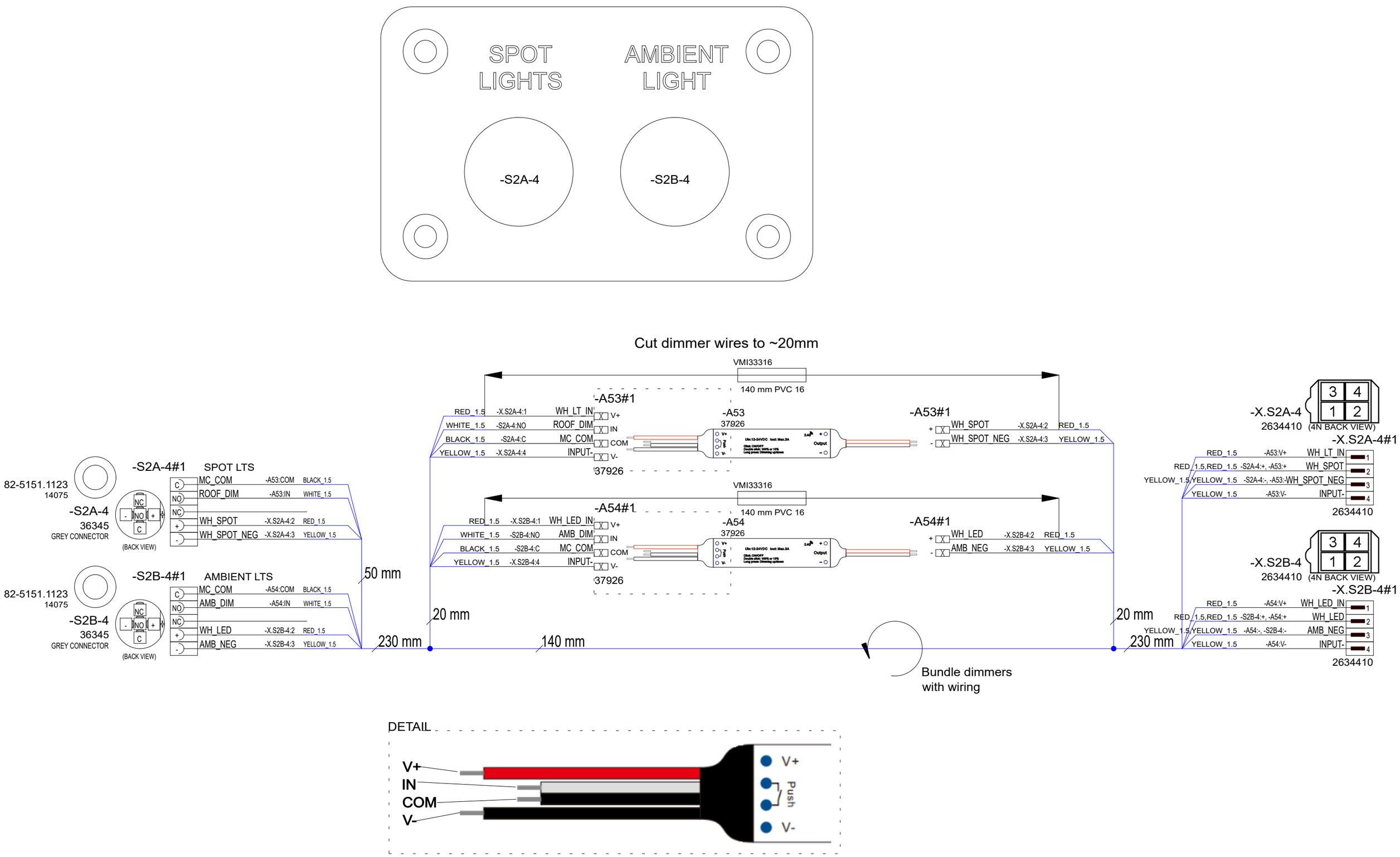

14.5.2024	PF	C1: 2005089; New product	Date	10.5.2024	NAVIX	Axopar	41488	41486	2004468
			Drawing by	PF		Boat	Sub-product code	Product code	Project ID
			Sheet rev.	1		28 MK3	LIGHT SWITCH MAIN CABIN OPEN LP	HL	99 / 106
Date of modification	Modified by	Description	Project rev.	C	Copyright by	Boat model	Title	Loc	Sheet

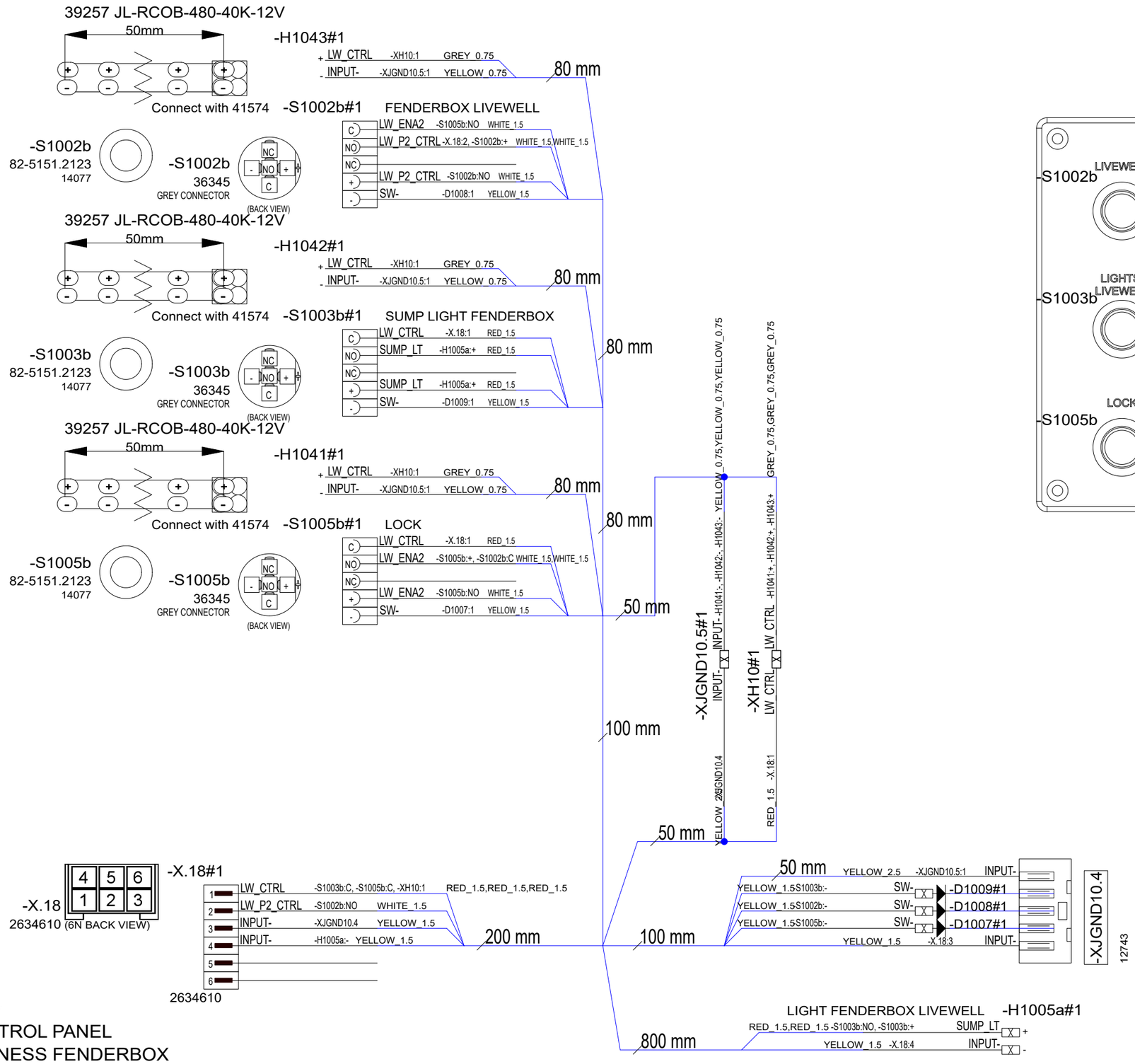

Customer note: Connect to either one of below
41387 - Axopar 28 MK3 CCX LIVEWELL CONTROL PANEL
42475 - Axopar 28 MK3 CCX LIVEWELL HARNESS FENDERBOX
If connected to 41387, remove S1002 and leave as dummy or cover with hole plug.

14.10.2024	PF	C1: 2005259; New drawing	Date	11.10.2024	Axopar		
			Drawing by	PF	Boat	Sub-product code: 42474	Product code: 2004468 Project ID
			Sheet rev.	1	28 MK3	CCX LIVEWELL CONTROL PANEL FENDERBOX	HL
Date of modification	Modified by	Description	Project rev.	C	Boat model	Title	Loc / Sheet: 100 / 106

NAVIX
Copyright by

42474_AXOPAR_28_MK3_CCX_LIVEWELL_ CONTROL_PANEL_FENDERBOX

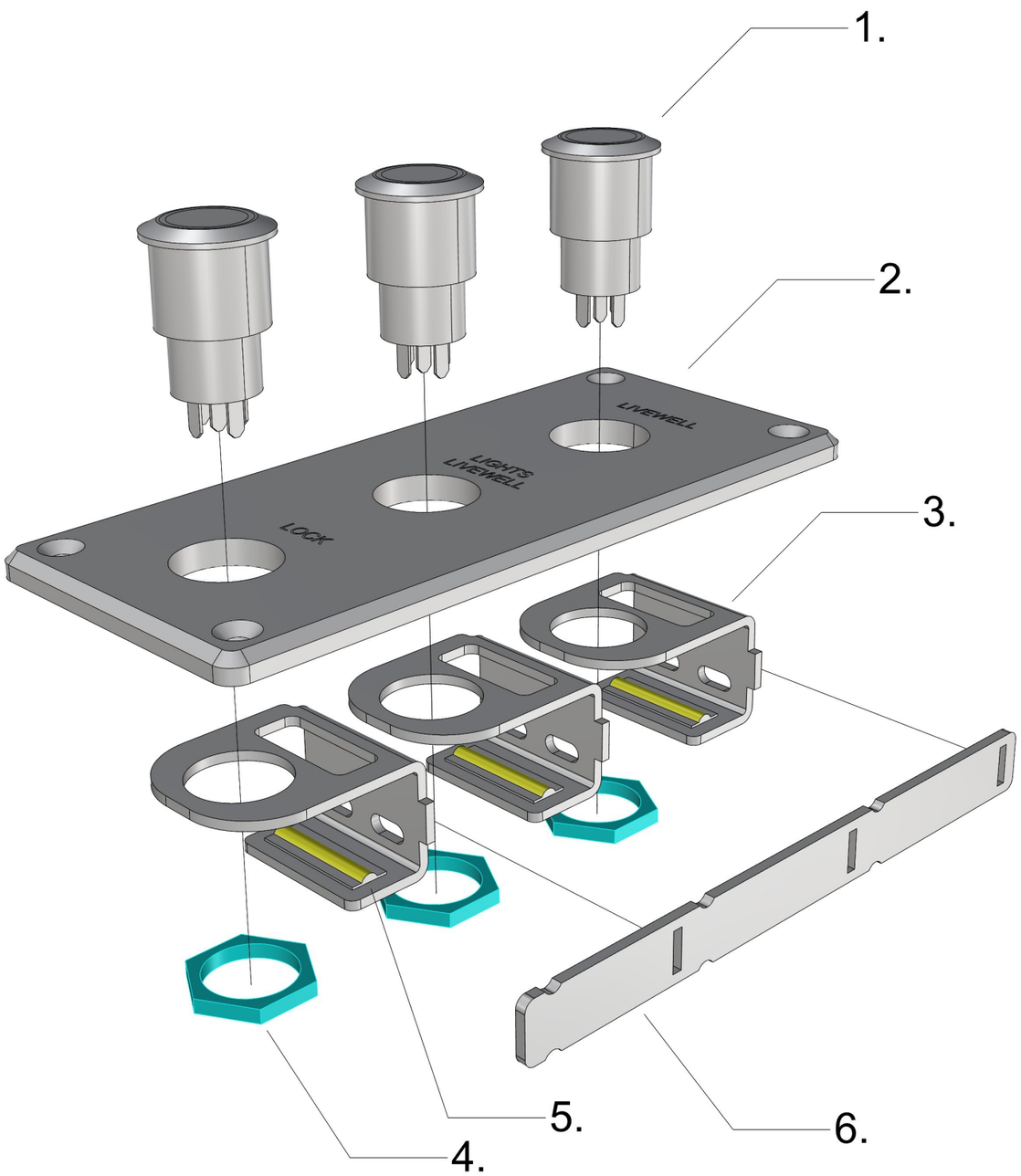

42474_AXOPAR_28_MK3_CCX_LIVEWELL_CONTROL_PANEL_FENDERBOX

1. 3PCS HALO SWITCH (AS IN DIAGRAM)

2. 1PC 42261_AXOPAR_28_MK3_LIVEWELL_CONTROL_PANEL_FENDERBOX_V1

3. 3PCS 42662_AXOPAR_28_MK3_LIVEWELL_CTRL_PANEL_LED_BRACKET_V1

4. 3PCS HALO SWITCH NUT

5. 3PCS 39257 - LED-Strip RCOB 12V 3800-4300K 5m/reel - JL-RCOB-480-40K-12V (25mm)

6. 1PCS 42663_AXOPAR_28_MK3_LIVEWELL_CTRL_PANEL_LED_BRACKET_BAR_V1
! ALIGN 42662s STRAIGHT AND GLUE WITH 37790 - Araldite 2051 !

24.10.2024 / TS (2005259)

Date of modification	Modified by	Description
14.10.2024	PF	C1: 2005259; New drawing

Date	14.10.2024
Drawing by	PF
Sheet rev.	1
Project rev.	C

NAVIX

Copyright by

Axopar		42474	2004468
Boat	Sub-product code	Product code	Project ID
28 MK3	CCX LIVEWELL CONTROL PANEL FENDERBOX	HL	101/ 106
Boat model	Title	Loc	Sheet

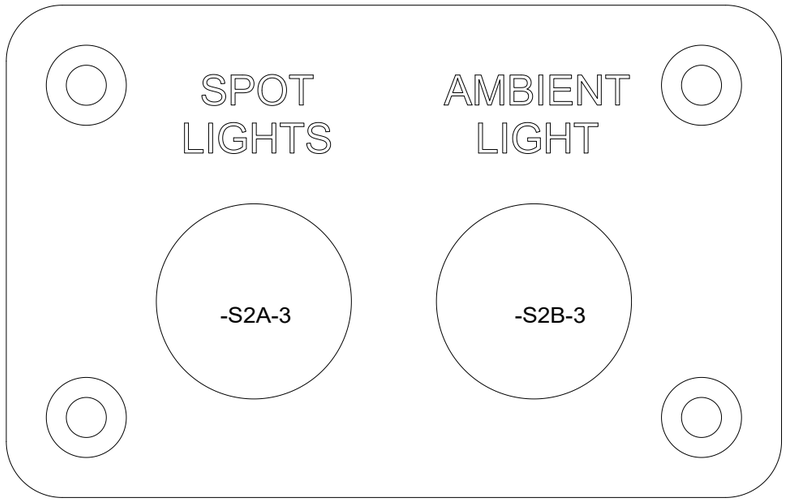

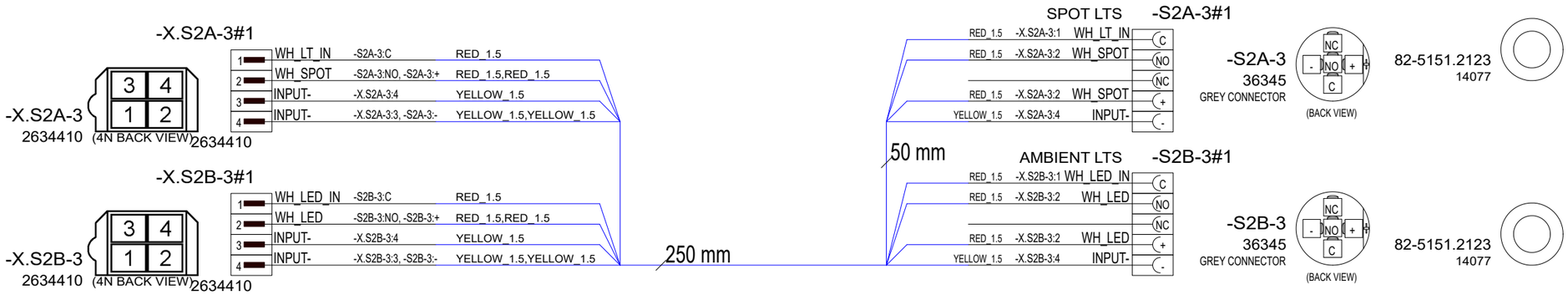

14.5.2024	PF	C1: 2005089; New product	Date	10.5.2024	NAVIX	Axopar	41488	41487	2004468
			Drawing by	PF		Boat	Sub-product code	Product code	Project ID
			Sheet rev.	1		28 MK3	LIGHT SWITCH MAIN CABIN OPEN NON-LP	HL	101/ 106
Date of modification	Modified by	Description	Project rev.	C	Copyright by	Boat model	Title	Loc	Sheet

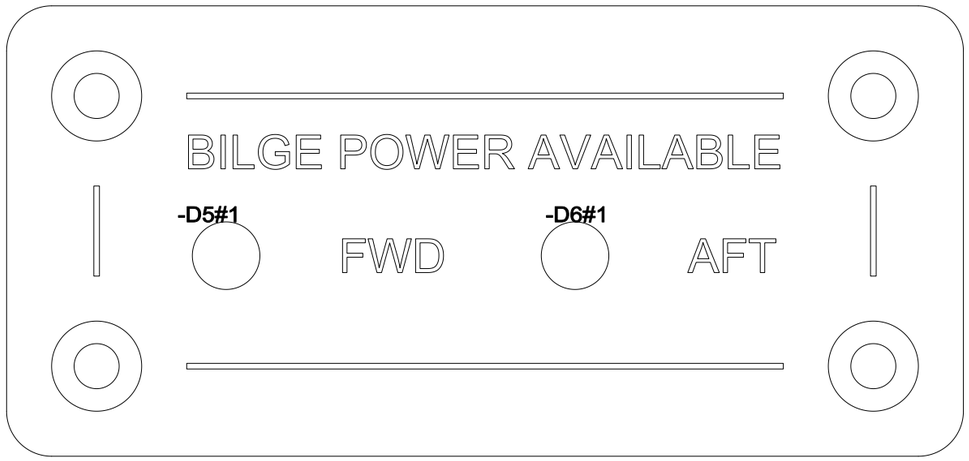

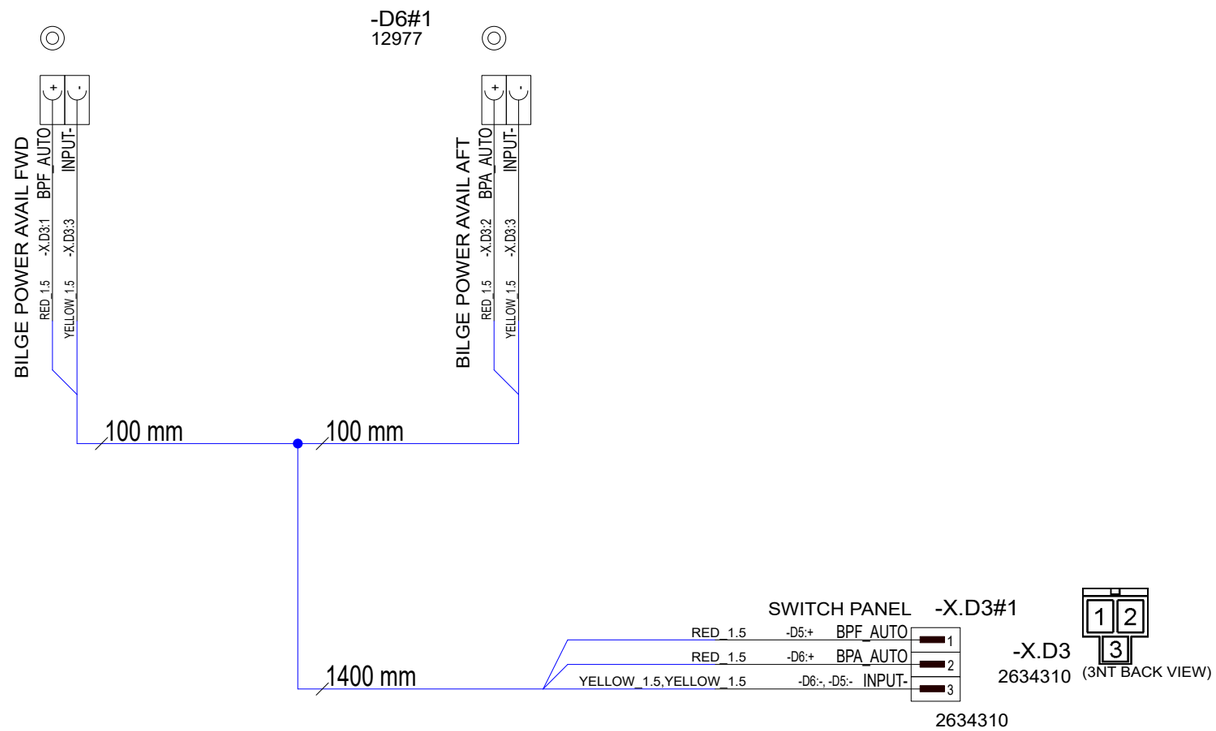

28.5.2024	PF	C1: 2005089; Not modified	Date	22.5.2023	NAVIX	Axopar		38693	2004468
			Drawing by	PF		Boat	Sub-product code	Product code	Project ID
			Sheet rev.	1		28 MK3	BILGE POWER AVAILABILITY PANEL	HL	102 / 106
Date of modification	Modified by	Description	Project rev.	C	Copyright by	Boat model	Title	Loc	Sheet

38693_AXOPAR_28_BILGE_POWER_AVAILABILITY_PANEL

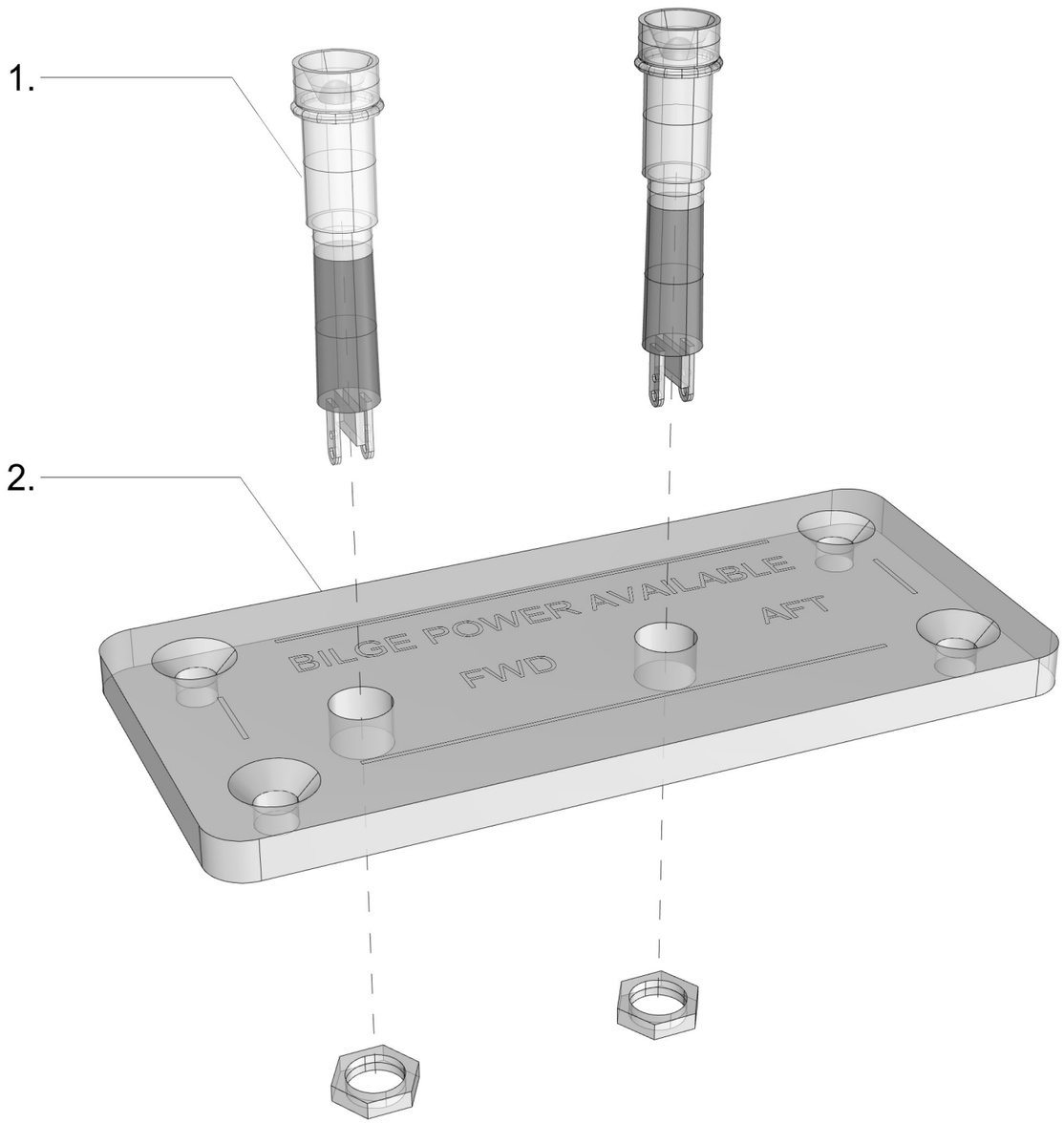

38693_AXOPAR_28_BILGE_POWER_AVAILABILITY_PANEL

1. 2 pcs Led Indicator ø3/6mm, 12V, Chrome frame (as in diagram)

2. 1 pc 39184_AXOPAR_28_BILGE_POWER_AVAILABILITY_PANEL_(WOC)_V1

22.05.2023 / TE (project 2004468)

28.5.2024	PF	C1: 2005089; Not modified	Date	22.5.2023	NAVIX	Axopar Boat		38693 Product code	2004468 Project ID
			Drawing by	PF					
			Sheet rev.	1		28 MK3 Boat model	BILGE POWER AVAILABILITY PANEL Title	HL Loc	103 / 106 Sheet
Date of modification	Modified by	Description	Project rev.	C	Copyright by				

3 Appendix III AIS Decontamination – North America

© 2026 Axopar Boats

Appendix III: AIS Decontamination – North America

According to

ABYC T-32 Design and Construction in Consideration of Aquatic Invasive Species 7/21

© 2021 American Boat & Yacht Council, Inc

Table of Contents

1 Decontamination criteria based on UMPS III, Table 3.....3

2 Example of AIS Owner's Manual Information.....4

3 Additional boat-specific recommendations.....6

© 2021 Axopar Boats

1 Decontamination criteria based on UMPS III, Table 3

The table is a summary of scientific research indicating the lethal water temperature at point of contact and duration for decontamination. Information is grouped by the location of the boat that is targeted and the life form of Dreissenid mussel targeted (e.g., adult mussel or veliger). Please refer to the *Student Training Curriculum for Watercraft Inspectors and Decontaminators to Prevent and Contain the Spread of Aquatic Invasive Species in the USA* for complete step by step procedures.

	Boat part/ location	**Water temperature**	**Duration[1)] (sec)**	**Type of application**	**Target life stage**
Exterior	Hull	140°F	10	High pressure spray[2)]	Adult
	Trailer	140°F	70	Low pressure spray[3)]	Adult
	PFDs, anchor, paddle	140°F	10	Low pressure spray	Adult or Veliger
Propulsion system	Gimbal	140°F	132	Low pressure spray	Adult
	Engine	140°F[5)], [6)]	See note[7)].	Flush[6)]	Veliger
Interior	Ballast tanks	120°F	130	*Low risk* – Flush[4)]	Veliger
				High risk – Fill and flush	
	Live well/bait well	120°F	130	Low pressure spray or flush	Veliger
	Bilge	120°F	130	Flush or low pressure spray	Veliger

1) The times listed are the minimum times necessary to achieve mortality.

2) High pressure = 3000 psi.

3) Low pressure = using the pressure from the decontamination unit with no nozzle, not to exceed 60 psi (essentially a garden hose flow).

4) Flush = adding water to a compartment of a boat to treat or force the water out.

5) These temperatures denote the exit temperature (i.e., temperature of water exiting the boat not exiting the wand or flush attachment).

6) When flushing engines with a dedicated connection (not muffs), the pressure should be limited to less than 60 psi to prevent internal engine damage. The maximum input temperature during flushing should not exceed 140°F.

7) *NOTE: Engine flushing relies on the exit temperature as a guideline for decontamination duration.*

© 2021 Axopar Boats

2 Example of AIS Owner's Manual Information

Aquatic invasive species

Aquatic invasive species (AIS) are plants and animals that occur in waters in which they are not native and whose introduction causes or is likely to cause economic or environmental damage or harm to human health. AIS have a negative impact on the waterway, its native species, and recreational and commercial uses of the waterway.

As responsible boaters and citizens, each boat owner should do their part to prevent the spread of these aquatic hitchhikers. In many cases, it is also required by law. Check local regulations for any waterway where you will boat.

After each boating trip, follow these three simple steps before you leave the water access to stop the spread of AIS: Clean, Drain, and Dry. This is the boater's way to help protect the environment from the damage that AIS can cause.

Clean

Inspect and remove all aquatic plants, animals, mud, and debris from the boat, engine, trailer, anchor, and any watersports equipment.

- Rinse, scrub or wash, as appropriate, away from storm drains, ditches, or waterways.
- Rinse watercraft, trailer, and equipment with hot water, when possible.
- Flush motor according to owner's manual.

Drain

Completely drain all water from the boat and its compartments, including but not limited to the bilge, wells, lockers, ballast tanks or bags, bait containers, engines, and outdrives.

Dry

Allow the boat to completely dry before visiting any other bodies of water.

© 2021 Axopar Boats

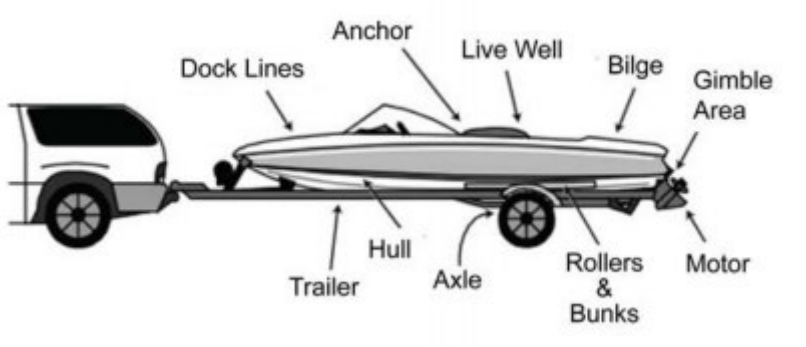

NOTE: Some localities may require inspection or decontamination before and/or after launching. Check state and local laws and regulations for requirements prior to traveling to go boating.

3 Additional boat-specific recommendations

Nonmotorized watercraft

Canoes, rafts, kayaks, rowboats, paddleboats, inflatables, sculls, and other nonmotorized recreational watercraft also require proper treatment.

- **Clean** straps, gear, paddles, floats, ropes, anchors, dip nets, and trailer before leaving the water body.
- **Dry** everything completely between each use and before storing.
- **Wear** quick-dry footwear or bring a second pair of footwear with you when portaging between waterbodies.

Sailboats

- **Clean** centerboard, bilge board, wells, rudderpost, trailer, and other equipment before leaving the water body.
- **Drain** water from boat, motor, bilge, ballast, wells, and portable bait containers before leaving the water body.

Motorized watercraft

- **Inspect** and **clean** motor or engine, including the gimbal area; trailer, including axles, bunkers, and rollers; anchors; dock lines; and equipment before leaving the water body.
- **Drain** live wells, bait containers, ballast and bilge tanks, and engine cooling systems.

Jet boats and personal watercraft (PWCs)

- **Inspect** and **clean** hull, trailer, intake grate, and steering nozzle, etc.
- **Clean** hull, trailer, intake grate, and steering nozzle, etc before leaving the water access.
- **Run** engine 5-10 sec to blow out excess water and vegetation from internal drive before leaving the waterbody.

© 2021 Axopar Boats

4 Appendix IV Transport dimensions

AXOPAR 29 CCX

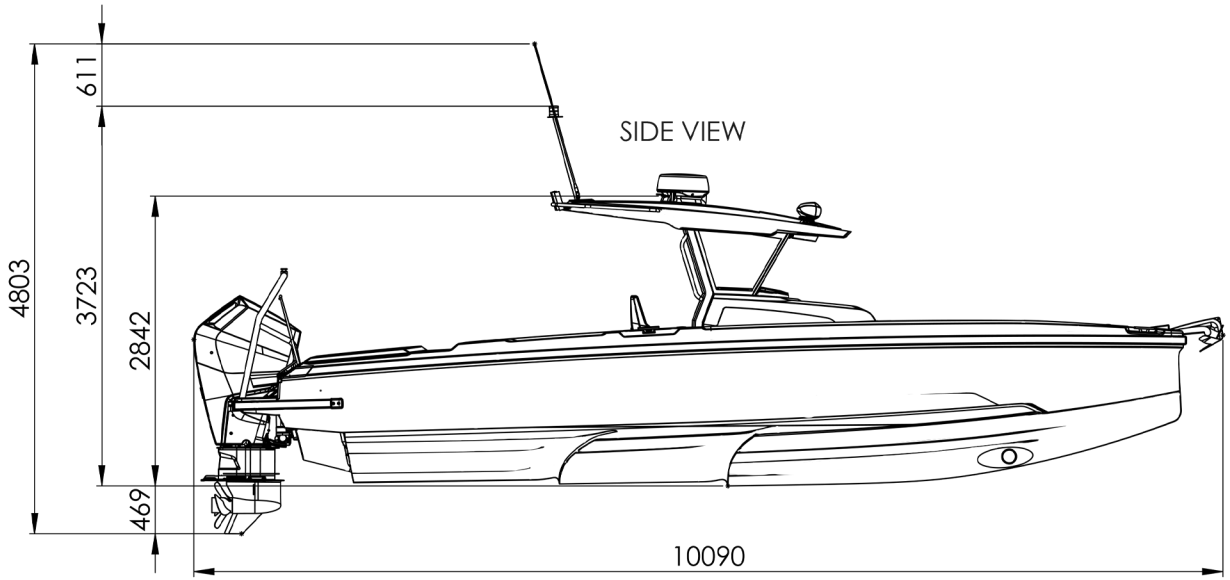

SIDE VIEW

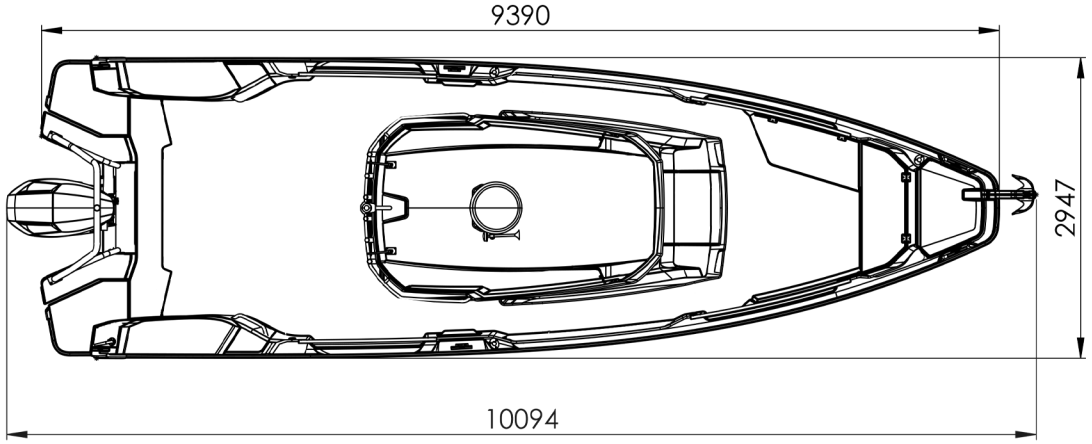

TOP VIEW

AXOPAR 29 CCX

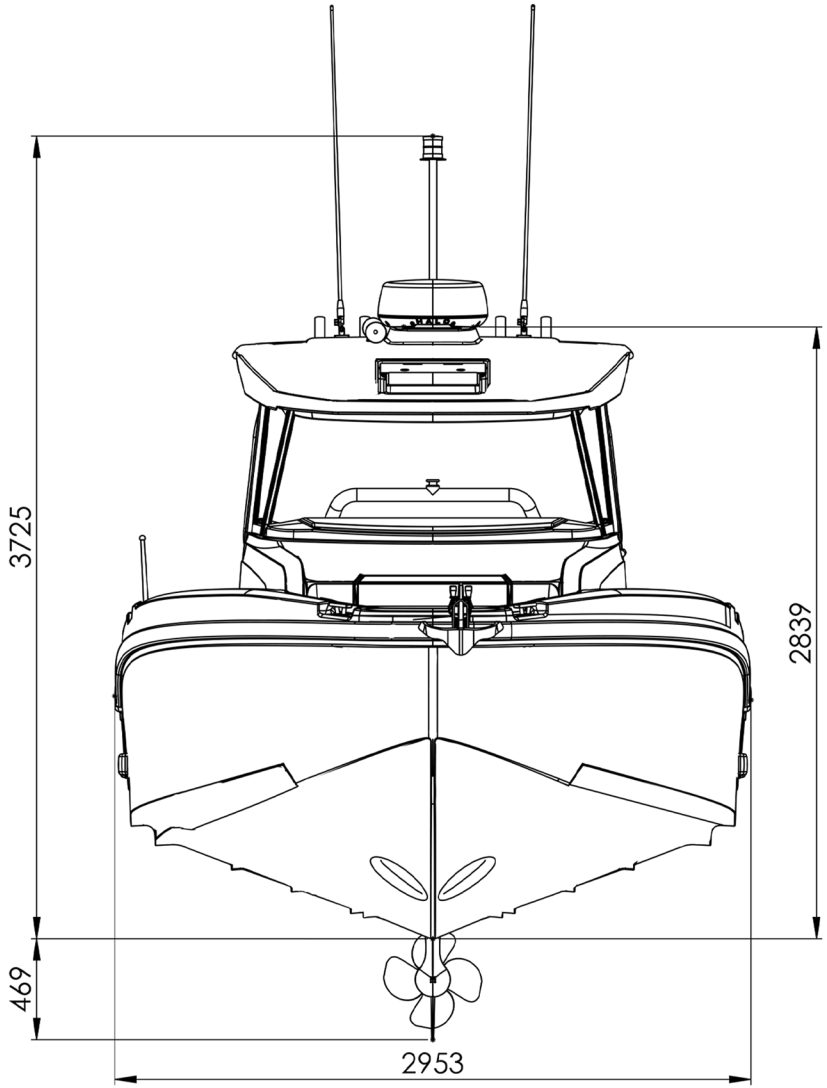

FRONT VIEW

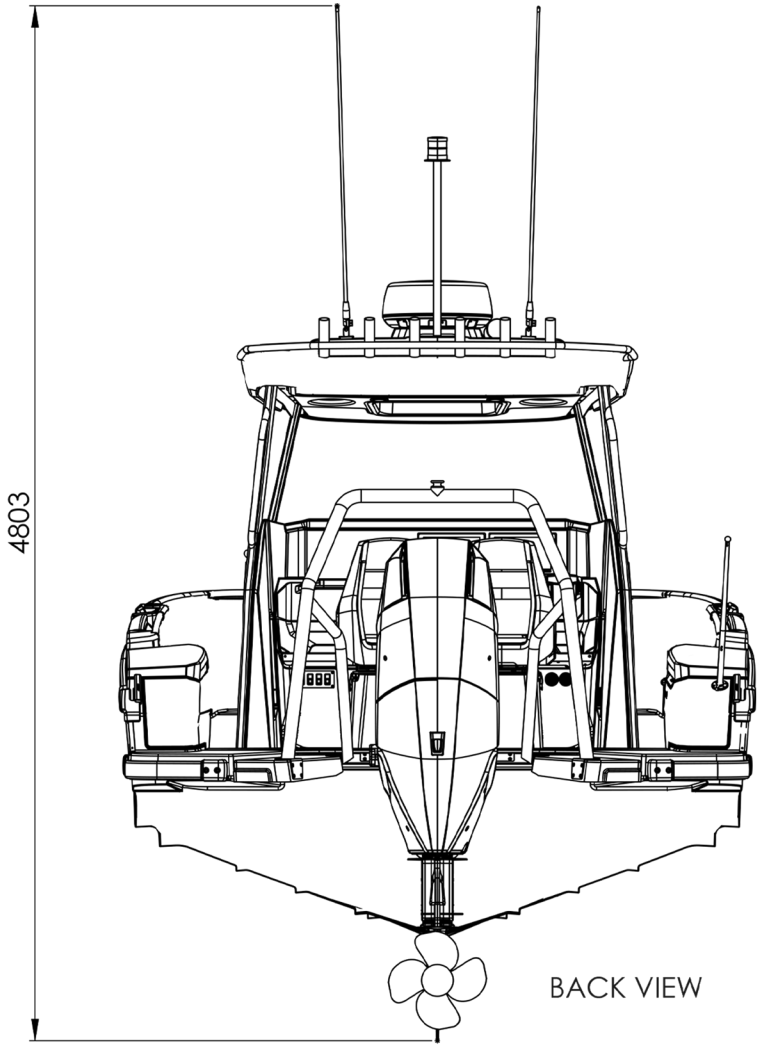

BACK VIEW

AXOPAR 29 SUN TOP

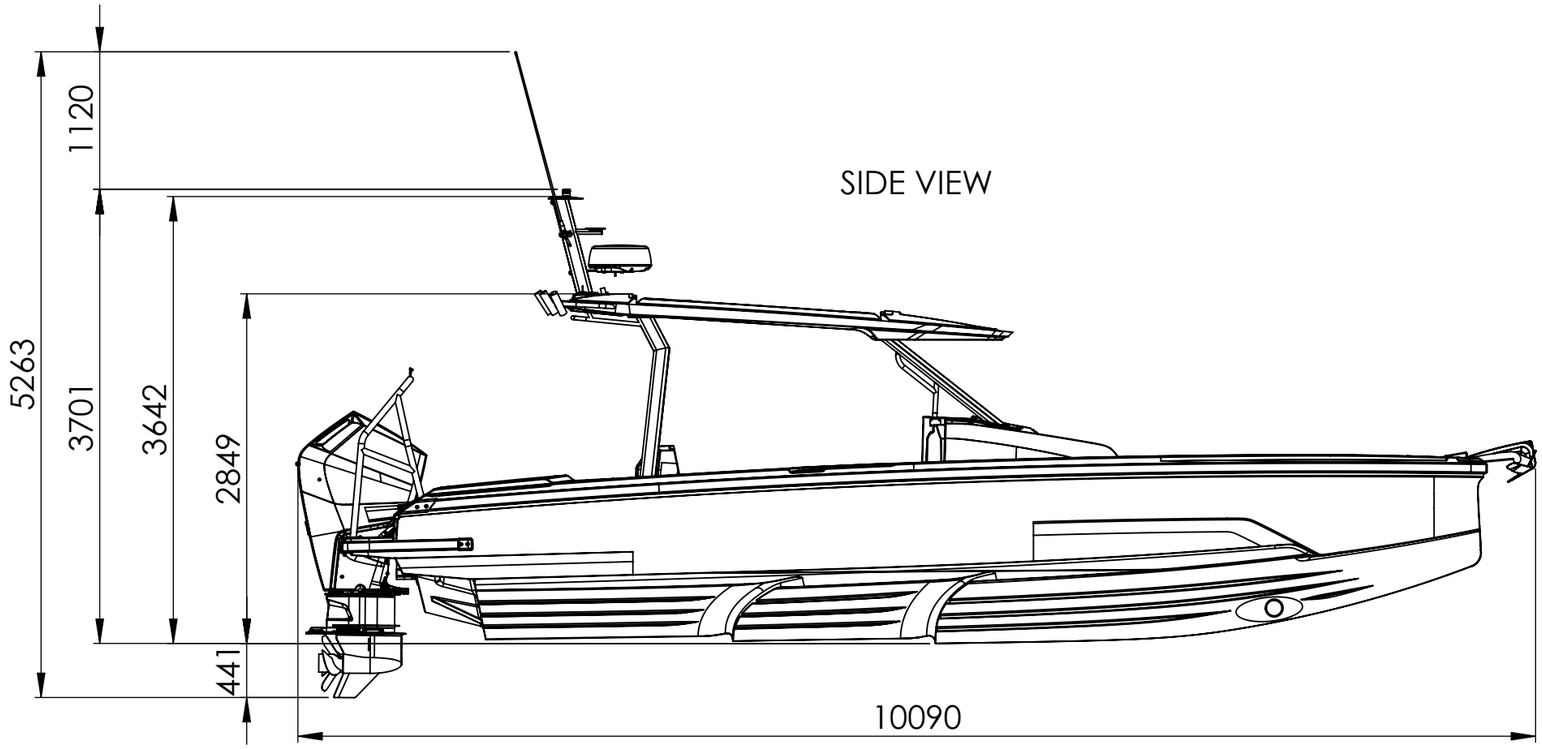

SIDE VIEW

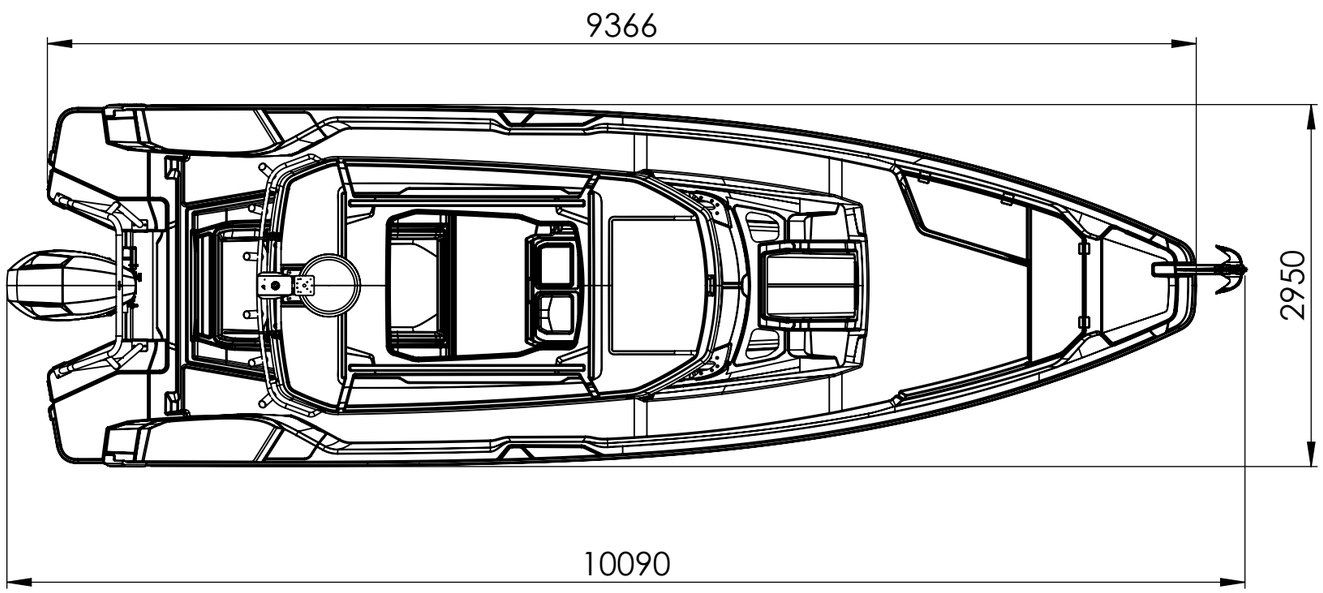

TOP VIEW

AXOPAR 29 SUN TOP

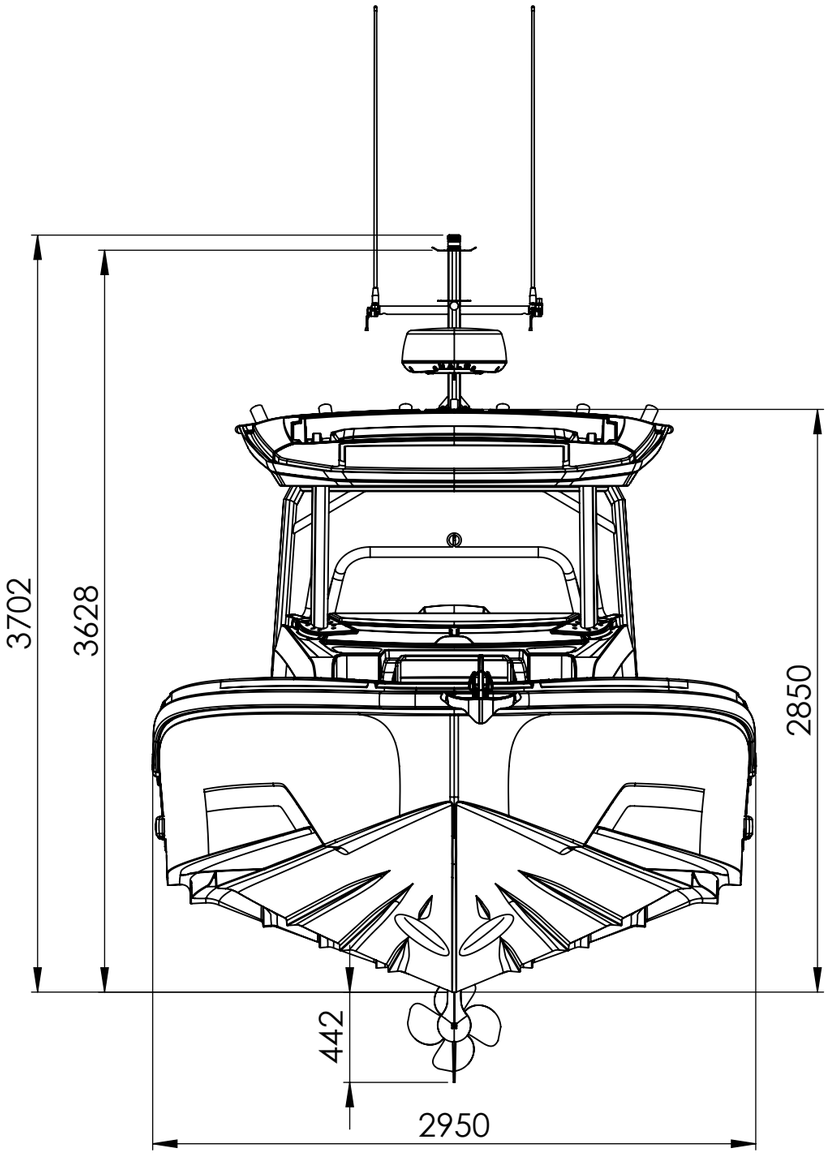

FRONT VIEW

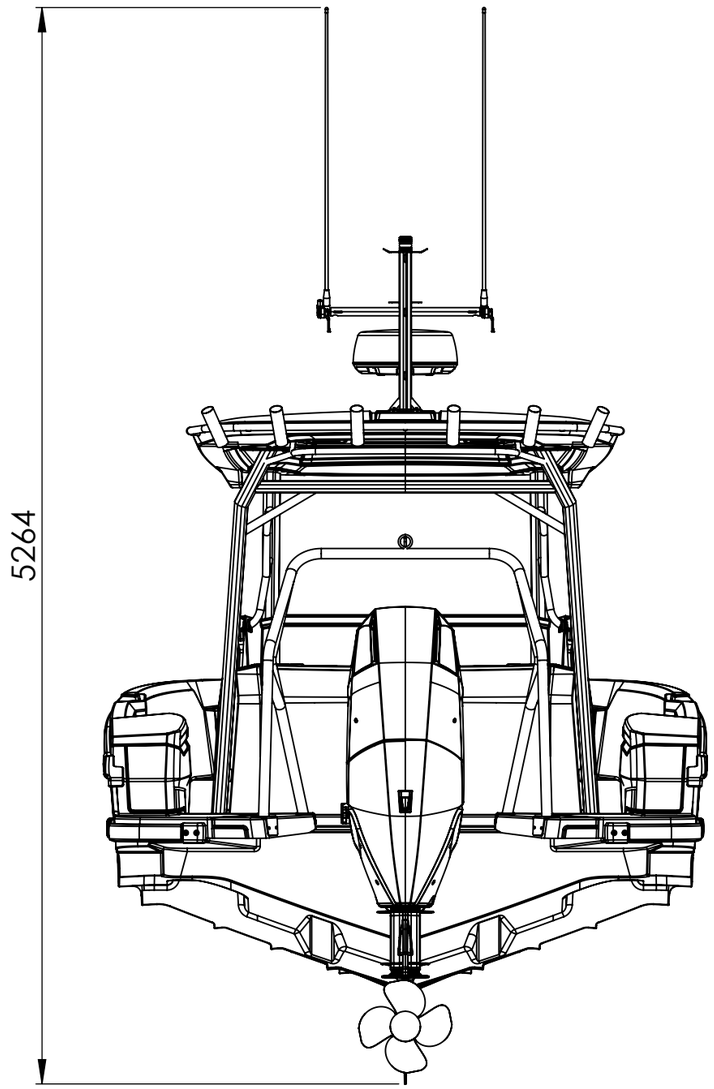

BACK VIEW

AXOPAR 29 RANGE - TRANSPORT CRADLE

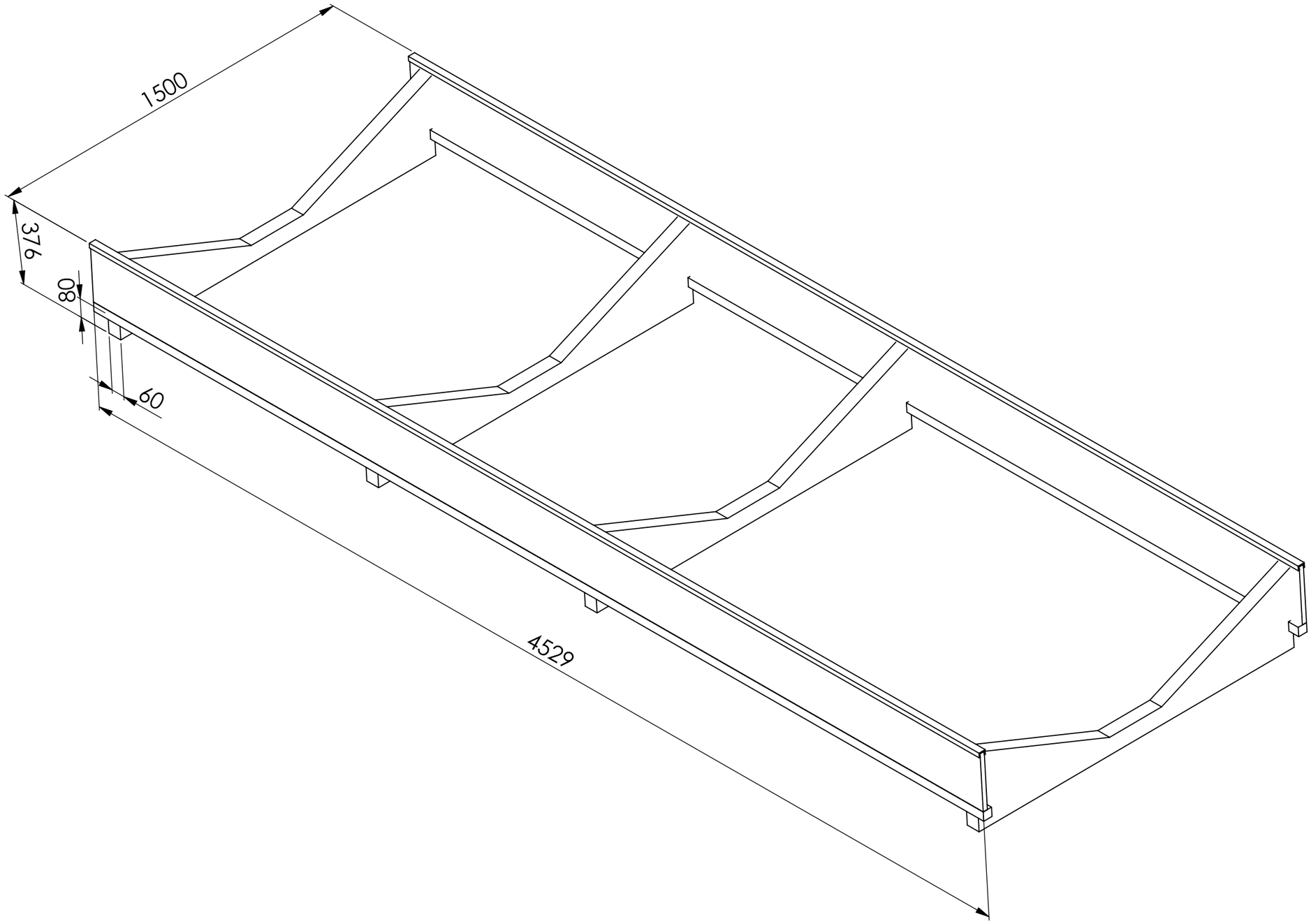

AXOPAR 29 RANGE - STRAPPING

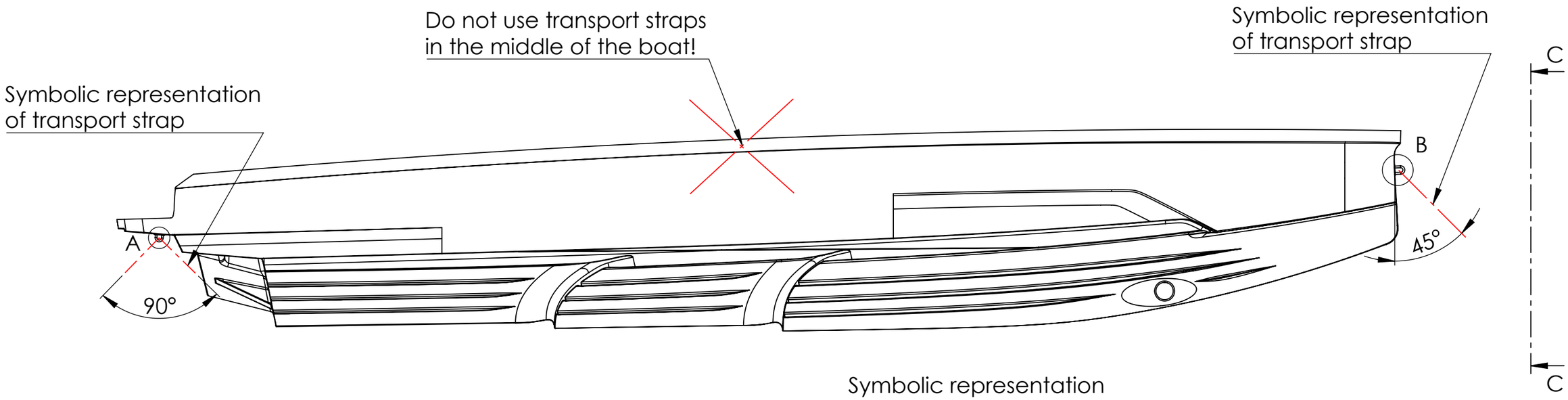

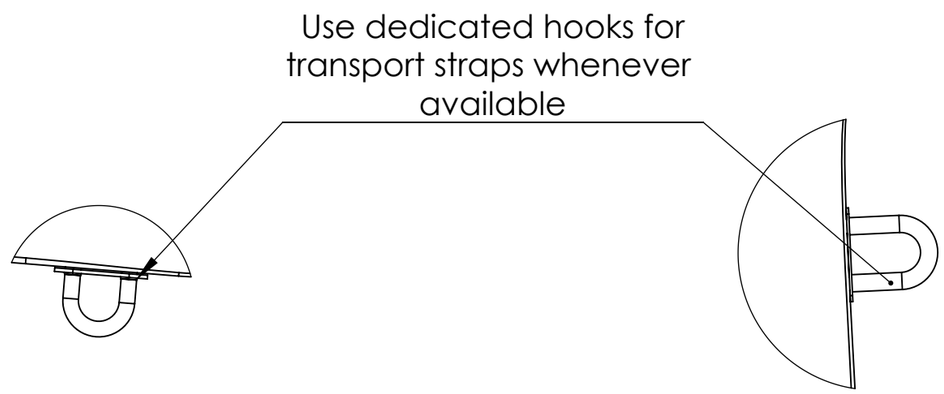

DETAIL A
SCALE 1 : 5

DETAIL B
SCALE 1 : 5

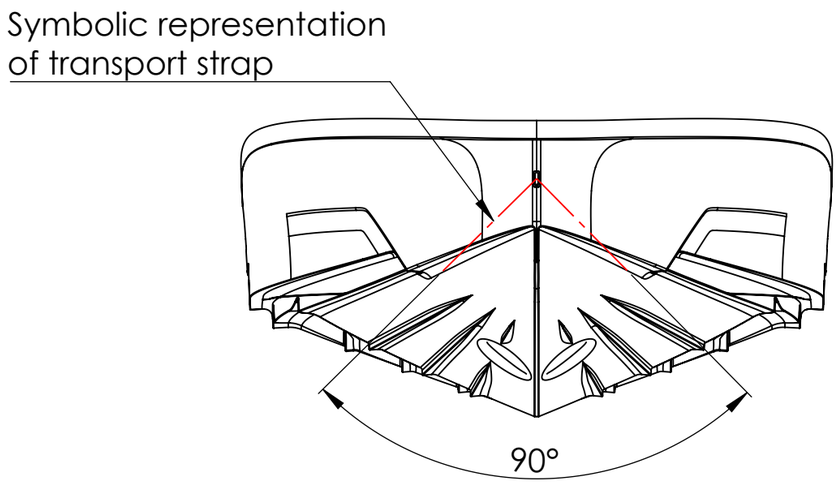

SECTION C-C

NOTE:
- for transporting and securing the boat, use transport straps only in the indicated places (aft and bow side).

AXOPAR 29 CROSS CABIN

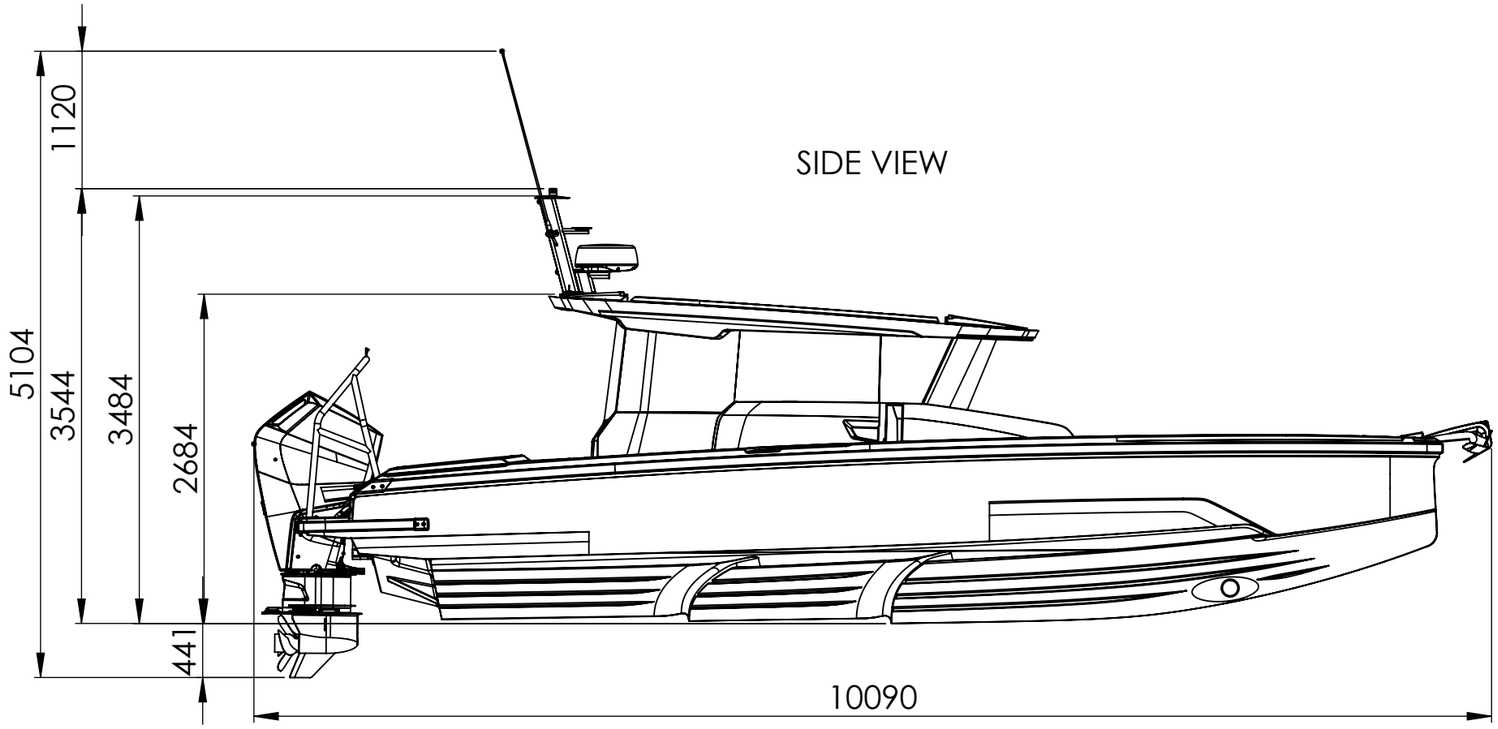

SIDE VIEW

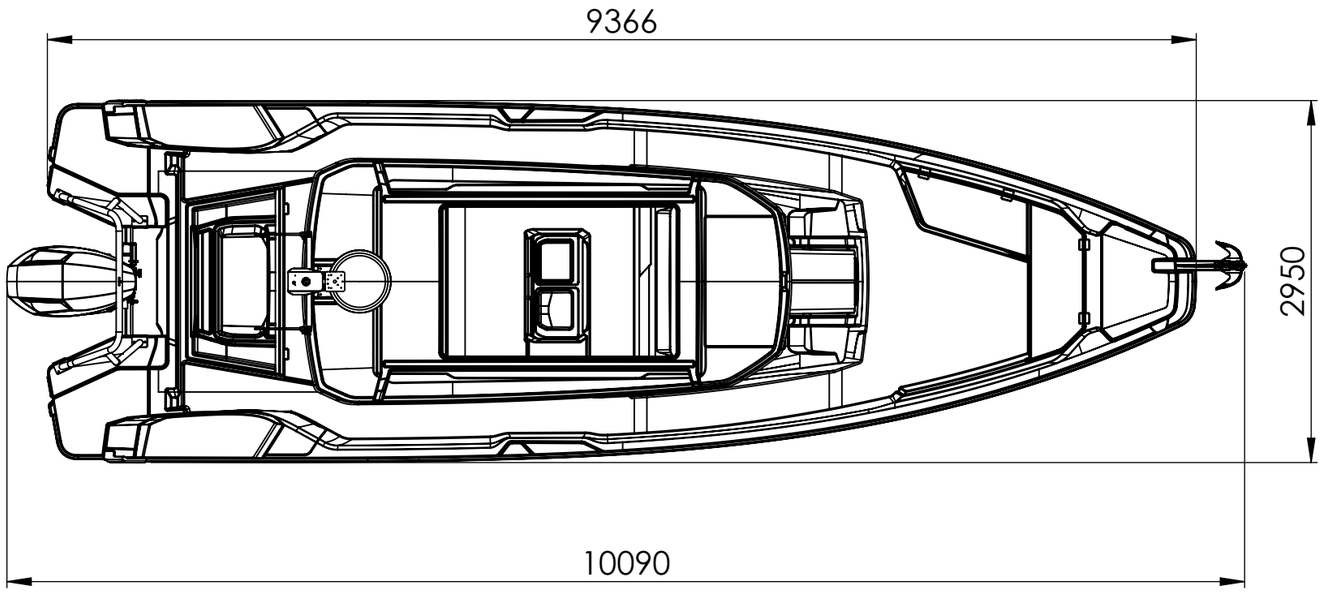

TOP VIEW

AXOPAR 29 CROSS CABIN

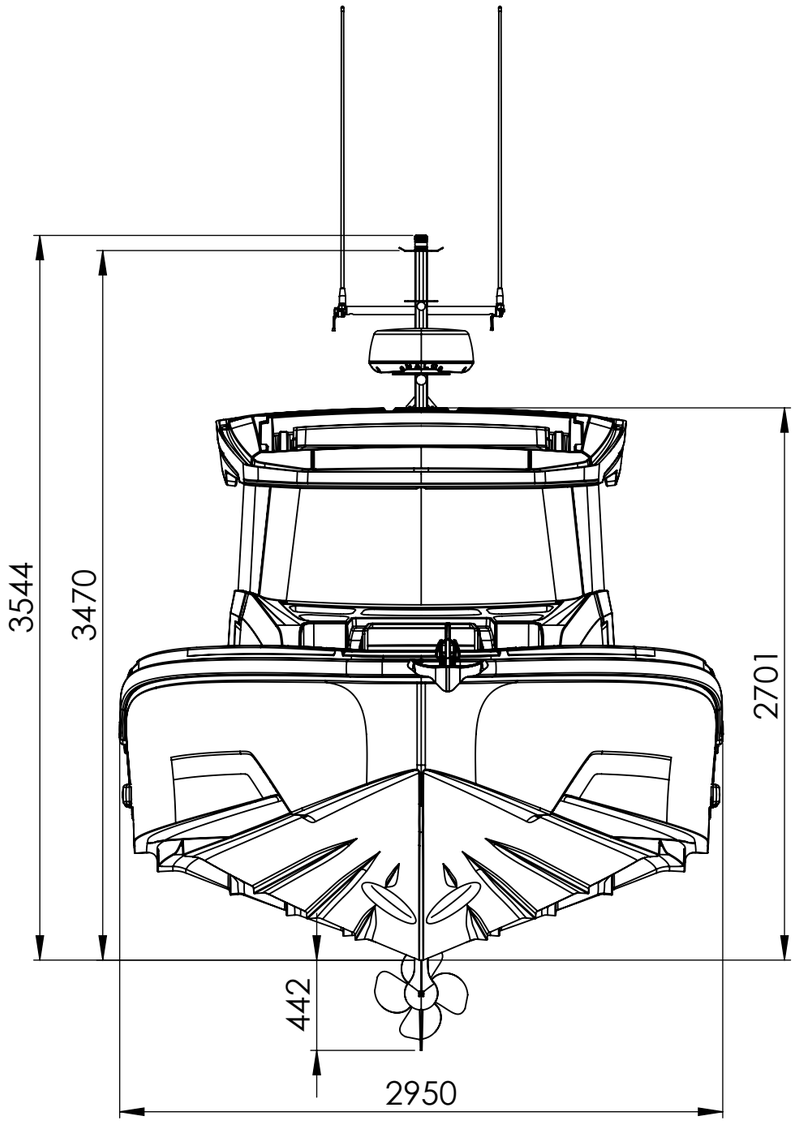

FRONT VIEW

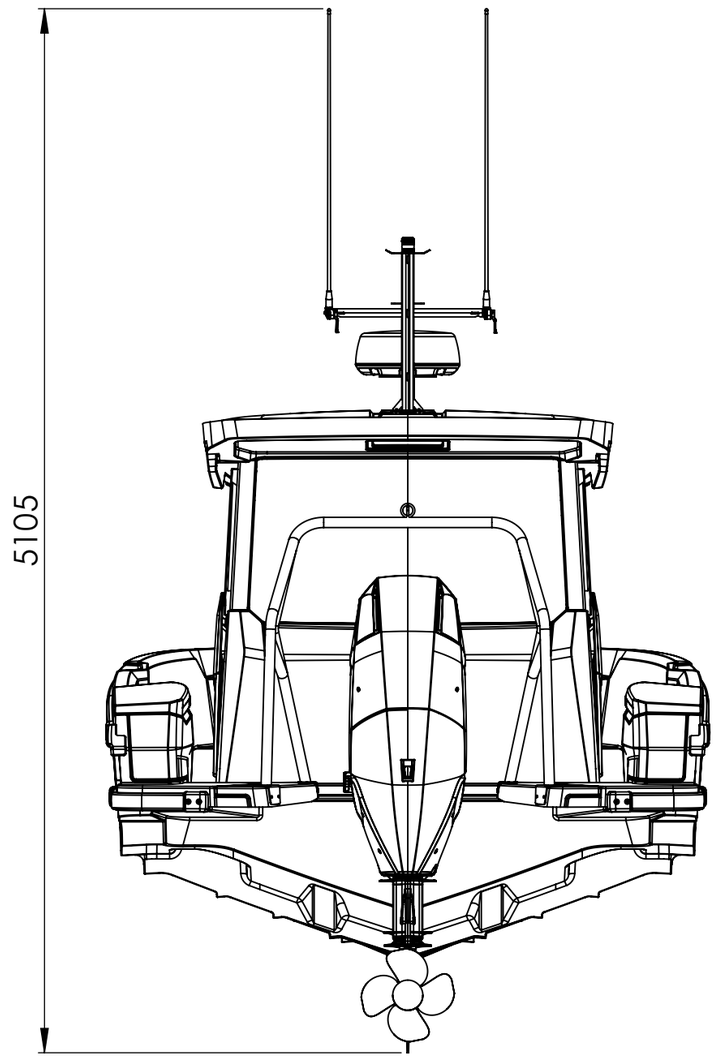

BACK VIEW

AXOPAR 29 RANGE - TRANSPORT CRADLE

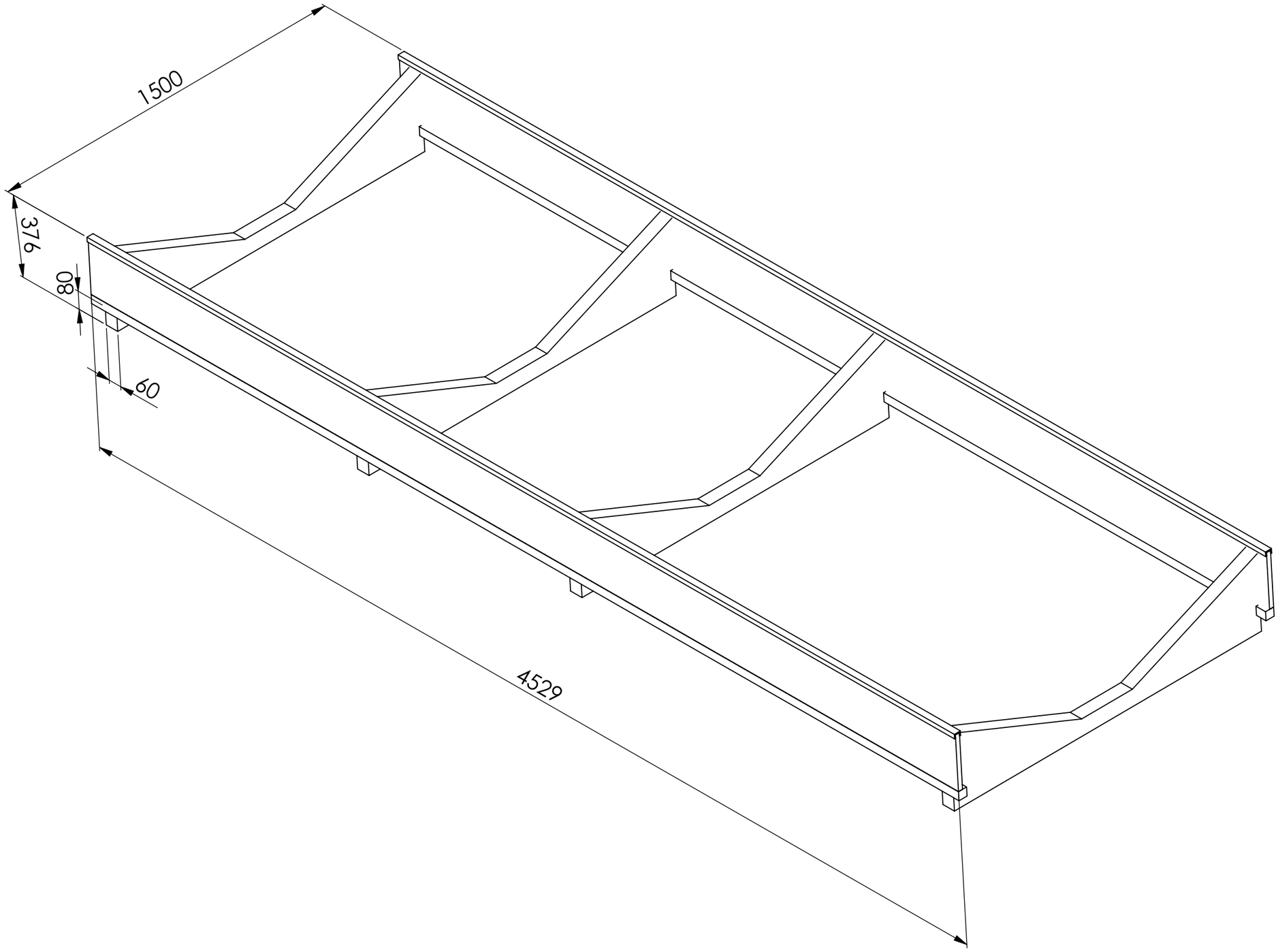

AXOPAR 29 RANGE - STRAPPING

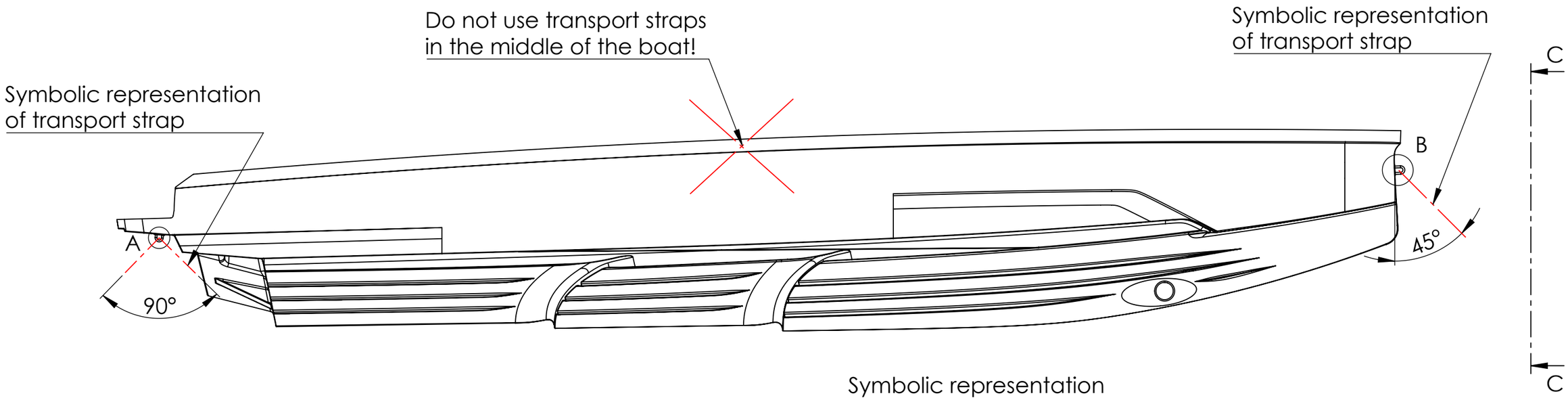

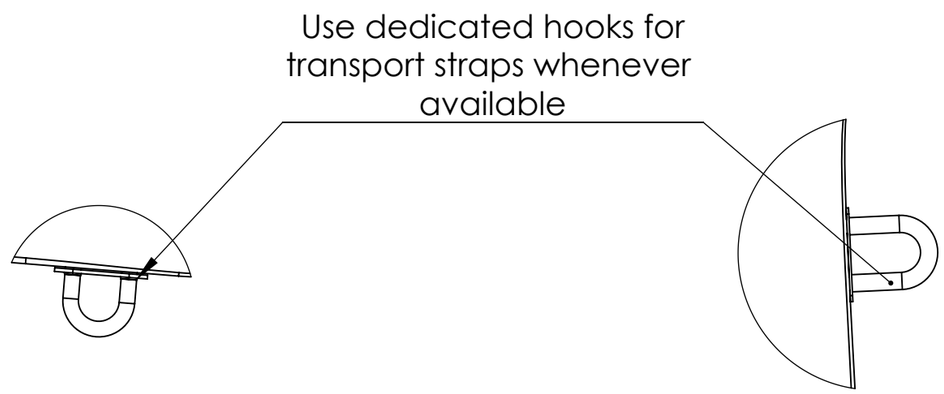

DETAIL A
SCALE 1 : 5

DETAIL B
SCALE 1 : 5

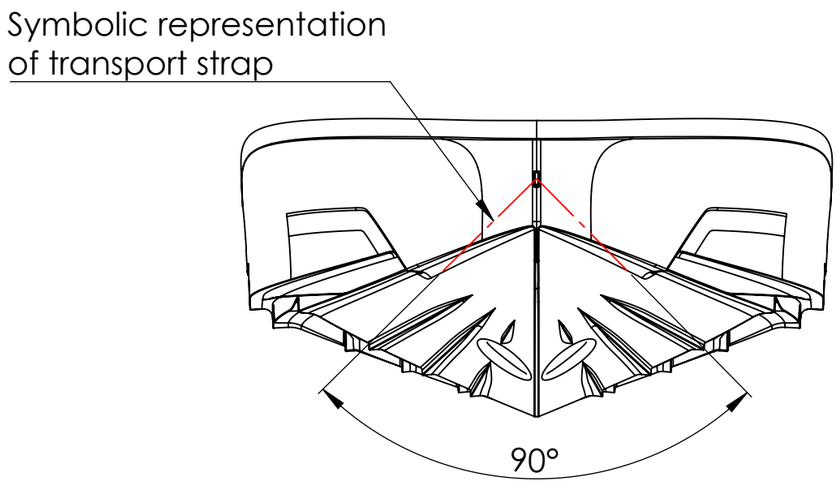

SECTION C-C

NOTE:
- for transporting and securing the boat, use transport straps only in the indicated places (aft and bow side).

5 Appendix V Warranty terms

© 2026 Axopar Boats

Appendix V: Warranty Terms - US

Warranty Terms for boats built before 1st of June 2026

© 2026 Axopar Boats

AXOPAR

Limited Warranty for Axopar Boats

US version 1.0

IMPORTANT NOTICE: THIS LIMITED WARRANTY IS SUBJECT TO BINDING ARBITRATION AND A WAIVER OF CLASS ACTIONS, AS DESCRIBED IN SECTION 7. Please also read the limitations and disclaimers in Sections 3(D), 3(E) and 6 regarding Boats.

Limited Warranty

Axopar Boats Ltd ("*Axopar*") warrants to the original retail purchaser ("*Purchaser*") of an Axopar boat manufactured and equipped with a hull identification number by Axopar ("*Boat*") and sold at retail by an authorized dealer ("*Dealer*") that Axopar will repair or replace defective materials and workmanship found during the applicable warranty period, subject to the limitations, exclusions and other conditions provided below. The decision to repair or replace will be made by Axopar in its sole discretion, and all repairs must occur at the location specified by Axopar (the "*Service Location*"). This Limited Warranty gives the Purchaser specific legal rights and Purchaser may have other legal rights, which vary from state to state.

1. Applicability

This Limited Warranty is valid worldwide during the applicable warranty period and applies only to Boats purchased by consumers and operated under normal, non-commercial use in compliance with the relevant owner's manual. Any warranty for Boats intended for commercial use must be separately agreed upon in writing between Axopar and the Purchaser.

The Limited Warranty also covers any equipment installed in the Boat by Axopar as an integral part of the delivery but excludes (i) equipment covered by a separate warranty, as further specified below in Sections 2 (Warranty Provider) and 3 (Warranty Period and Limitations) and (ii) any items installed by the Dealer in the Boat or included by the Dealer with the Boat. Equipment acquired by the Purchaser from third parties and which are not included in the original delivery are not covered under this Limited Warranty.

The hull identification number of the Boat and other particulars relevant to this Limited Warranty are recorded in the applicable sales contract and/or in the Boat's warranty certificate.

2. Warranty Provider

This Limited Warranty is provided solely by Axopar. Contact details are shown in the warranty certificate provided to the Purchaser upon delivery of the Boat. All warranties provided by the manufacturers and distributors of components, equipment and parts of the Boat are hereby assigned to the Purchaser to the extent permitted by the applicable manufacturers and distributors, as Purchaser's sole and exclusive remedy with respect to those items.

3. Warranty Period and Limitations

The Limited Warranty is valid from the delivery date of the Boat to the Purchaser, as reflected in the Boat's warranty certificate (the "*Delivery Date*"), for the time periods identified below.

(A) ***Five-Year Limited Warranty on Structural Hull:***

Axopar will repair or replace any substantial defect in material or workmanship in the Boat's structural hull that is reported within five years from the Delivery Date. The structural hull means the fiberglass molded shell and all its integral structural components. A defect is substantial if it causes the Boat to be unfit or unsafe for general use as a pleasure craft under normal operating conditions.

(B) ***Two-Year Limited Warranty on Components Manufactured or Installed by Axopar:***

Axopar will repair or replace any components manufactured or installed by Axopar that are defective in factory materials or workmanship and are reported within two years from the Delivery Date (and are not already addressed in the specific warranties provided in paragraphs (A) and (C)).

(C) ***One-Year Limited Warranty on Upholstered Items, Canvas, Floor Materials, Other Coating and Painted Parts:***

Axopar will repair or replace any upholstered items, canvas, floor materials, other coating, and painted parts manufactured or installed by Axopar that are defective in factory materials or workmanship and are reported within one year from the Delivery Date.

(D) ***Exclusions***

The Limited Warranty does not apply to or cover the following items: (1) any costs incurred from hauling or transporting the Boat to and from the Service Location; (2) any equipment, parts or accessories not installed by Axopar or that carry their own individual warranties provided by third parties, including but not limited to engines, propellers, pre-rigging equipment, batteries, generators, A/C units, steering mechanisms and other electronic equipment; (3) minor changes to the Boat's external surfaces that have no influence on the strength or serviceability of the Boat, including but not limited to any damage, deterioration, fading or discoloration or mold of cushions, cracking, fading or oxidation of gel coat, stress lines, anti-fouling bottom paint or other slight irregularities in paint work, lacquer work, woodwork or chrome finish or other minor surface blemishes; (4) windshield damage or leakage; (5) any damage resulting from Purchaser's or a third party's negligence, willful misconduct, improper use of the Boat, overloading, powering in excess of the recommended maximum horsepower, improper rigging, misuse or alterations or repairs or attempted repairs on the Boat not authorized by Axopar, including use of an improper trailer, Boat lift or sling; (6) failure of the Purchaser or any third party to use, maintain or store the Boat as specified in the owner's manual, or any other failure to provide reasonable care and maintenance; (7) normal wear and tear items, including but not limited to ropes, filters, bulbs and batteries; (8) any representation or implication of the Boat's properties or characteristics, such as speed, weight, range, performance or fuel consumption; (9) any failure or defect not reported to Axopar or Dealer in accordance with Section 4 (Warranty Procedures) of this Limited Warranty; (10) any failure or defect arising from repairs made by unauthorized service providers; (11) any failure or defect arising from acts of nature; and (12) any Boat that was previously salvaged or declared a total loss or constructive loss for any reason.

(E) ***Voiding the Limited Warranty***

This warranty becomes void if: (1) Purchaser sells or otherwise conveys the Boat to a third party during the warranty period and Axopar is not provided with the bill of sale of the Boat and/or the contact information of the new owner; (2) Purchaser uses the Boat in other than non-commercial activities; (3) the Boat is used in a competitive event; (4) any unauthorized modifications or changes are made to the Boat (e.g. structural modification or modifications to electrical systems on board or the programming of its engine or other systems); or (5) the Boat is salvaged or declared a total loss or constructive loss for any reason.

4. Warranty Procedures

To obtain warranty service, Purchaser must notify the Dealer about the failure or defect within a reasonable time after becoming aware of it or after Purchaser should have become aware of it. Upon detecting a defect, the Purchaser is required to take all reasonable steps necessary to prevent the defect from deteriorating further. When reporting any defect, the Purchaser must provide the Boat's hull identification number, a copy of the warranty certificate, a reasonable number of clear and detailed photos of the defect, and a supported or documented explanation regarding when the Boat was purchased and the Dealer from which it was purchased.

After providing notice of the defect to the Dealer, the Dealer will notify Purchaser of the procedures to follow regarding this Limited Warranty. Dealer will then notify Axopar, and upon being notified of the warranty claim by Dealer, Axopar is solely responsible for determining and authorizing in writing the remedial action to be performed.

5. Axopar's Warranty Responsibilities

Axopar has always the right to repair a defect covered by this Limited Warranty if, in view of the nature and extent of the defect, it can be done within a reasonable time and in such a way that it does not result in repair costs or material detriment to the Purchaser. All repairs shall be carried out in a way and at the Service Location designated by Axopar.

If Axopar determines that repair is not possible, Purchaser has the right to a discount proportionate to the defect. Alternatively, Axopar may, in its sole discretion, offer to Purchaser a replacement Boat with a market value equal to the replaced Boat's market value (considering the Boat's age and condition) if it did not have that specific unrepairable defect.

If Axopar reasonably determines that the Boat defect is not covered by the Limited Warranty, Axopar has the right to charge the Purchaser for any costs that arise from inspecting and determining the defect and its cause. Any repair costs and expenses are subject mutual agreement by Axopar and the Purchaser.

6. Sole Remedy and Other Limitations

The repair, discount and replacement obligations specified in Section 5 (Axopar's Warranty Responsibilities) for parts or materials covered by this Limited Warranty are Purchaser's sole and exclusive remedy, and Axopar's sole obligations, for any claims whatsoever or any losses resulting from product failure.

This Limited Warranty the final, complete and exclusive warranty offered by Axopar regarding the Boat, and no other person or entity (including the Dealer or their respective sales agents or employees) is authorized to make any other warranties or representations on behalf of Axopar. **EXCEPT FOR THE EXPRESS LIMITED WARRANTIES PROVIDED IN THIS LIMITED WARRANTY, AXOPAR DISCLAIMS ALL OTHER EXPRESS AND IMPLIED WARRANTIES AND REPRESENTATIONS OF ANY KIND, INCLUDING ANY IMPLIED WARRANTY OF MERCHANTABILITY, AND FITNESS FOR A PARTICULAR PURPOSE. EXCEPT AS OTHERWISE PROVIDED IN THIS LIMITED WARRANTY, ALL BOATS ARE PROVIDED "AS IS" AND "WITH ALL FAULTS".** If and to the extent that an implied warranty cannot be disclaimed, that warranty is limited to duration of the respective express Limited Warranty provided herein. Some states do not allow the exclusion of implied warranties or do not allow limitations on the amount of time an implied warranty lasts, so the above limitations may not apply to some Purchasers.

To the extent permitted by applicable law, Axopar disclaims all liability to Purchaser and third parties for any economic loss arising from claims of product failure, negligence, defective design, lack of seaworthiness, manufacturing defect and any other liability not expressly covered in this Limited Warranty. **TO THE EXTENT PERMITTED BY APPLICABLE LAW, NEITHER AXOPAR NOR DEALER SHALL UNDER ANY CIRCUMSTANCES BE LIABLE FOR ANY INDIRECT, CONSEQUENTIAL, SPECIAL, ENHANCED, OR PUNITIVE DAMAGES, INCLUDING LOSS OF THE BOAT, PROFIT, PRODUCTIVITY, BUSINESS, CONTRACTS, REVENUES OR ANTICIPATED SAVINGS, OR INCREASED COSTS OR EXPENSES, AND IN NO EVENT SHALL AXOPAR'S LIABILITY EXCEED THE ACTUAL AMOUNT PAID BY PURCHASER FOR THE BOAT.** Some states do not allow the exclusion or limitation of incidental or consequential damages, so the above limitation or exclusion may not apply to every Purchaser.

If, at any time, any provision of this Limited Warranty is or becomes illegal, invalid or unenforceable in any respect under the laws of any jurisdiction, the legality, validity or enforceability of the remaining provisions will remain unaffected.

7. Arbitration and Limitation on Actions

PLEASE READ THIS SECTION CAREFULLY. WE WANT YOU TO KNOW HOW IT AFFECTS YOUR RIGHTS.

(A) *Customer Service and FAQs*

In the unlikely event that an issue, concern or claim (including legal claims) remains unresolved after the procedure specified in Section 4 (Warranty Procedures) and the issue has been escalated to Axopar, Purchaser and Axopar each agree to discuss any issue informally for at least 30 days. Purchaser can do this by sending your full name and contact information, your concern and your requested solution to Axopar at warranty@axopar.fi, Attn: Legal Department. If Axopar would like to discuss an issue with Purchaser, Axopar will contact you at the address provided to the Dealer.

(B) *Agreement to Arbitrate*

If an agreed solution is not reached at the end of the 30-day discussion period, Purchaser and Axopar each agree that any issue, concern or claim (including legal claims) that either may have arising out of or relating to this Limited Warranty must be resolved through final binding arbitration before the American Arbitration Association using its Consumer Arbitration Rules, available at https://www.adr.org/sites/default/files/Consumer%20Rules.pdf (the "*AAA Rules*") or available by calling the American Arbitration

Association at 1-800-778-7879. As an exception to this agreement to arbitrate, Axopar gives you the right to pursue in small claims court any claim that is within that court's jurisdiction, so long as you proceed solely on an individual basis. A party who intends to seek arbitration must first send to the other party, by certified or registered mail, a written notice of dispute. Purchaser may download or copy a form notice of dispute and a form to initiate arbitration from www.adr.org. Unless Purchaser and Axopar agree otherwise, the arbitration hearings will take place in a reasonably convenient location for both parties as determined by the arbitrator in accordance with the AAA Rules, and the hearings may be conducted in-person, by videoconference, phone or by the exchange of documents. The arbitrator's decision will be binding and may be enforced and entered as a judgment in any court of competent jurisdiction. If the arbitrator rules against Axopar, Axopar will reimburse Purchaser for reasonable attorneys' fees and costs, regardless of who initiated the arbitration. However, if the arbitrator rules in Axopar's favor, Axopar will not seek reimbursement of attorneys' fees and costs, regardless of who initiated the arbitration.

(C) *Time Limitation; No Class Actions*

To help resolve any issues between us promptly and directly, Axopar and Purchaser agree to begin any arbitration under this Limited Warranty within one year after the claim first arose; otherwise, the claim is waived. Axopar and Purchaser also agree to arbitrate in each of our individual capacities only – not as a representative or member of a class – and each of us expressly waives any right to file a class action or seek relief on a class action basis. Furthermore, unless Purchaser and Axopar agree in writing, the arbitrator may not consolidate more than one person's claims and may not otherwise preside over any form of a representative of class proceeding.

(D) *Confidentiality*

All arbitration proceedings are confidential, unless both Purchaser and Axopar agree otherwise. Arbitration orders and awards required to be filed with applicable courts of competent jurisdiction are not confidential and may be disclosed by the parties to such courts. A party who improperly discloses confidential information will be subject to sanctions. The arbitrator and forum may disclose case filings, case dispositions, and other case information as required by a court order of proper jurisdiction.

Warranty Terms for boats built from 1st of June 2026 onwards

© 2026 Axopar Boats

AXOPAR

Limited Warranty for Axopar Boats

US version 1.1 (February 2026)

IMPORTANT NOTICE: THIS LIMITED WARRANTY IS SUBJECT TO BINDING ARBITRATION AND A WAIVER OF CLASS ACTIONS, AS DESCRIBED IN SECTION 7. Please also read the limitations and disclaimers in Sections 3(D), 3(E) and 6 regarding Boats.

Limited Warranty

Axopar Boats Ltd ("*Axopar*") warrants to the original retail purchaser ("*Purchaser*") of an Axopar boat manufactured and equipped with a hull identification number by Axopar ("*Boat*") and sold at retail by an authorized dealer ("*Dealer*") that Axopar will repair or replace defective materials and workmanship found during the applicable warranty period, subject to the limitations, exclusions and other conditions provided below. This is a "Limited Warranty" under Magnuson-Moss Warranty Act. The decision to repair or replace will be made by Axopar in its sole discretion, and all repairs must occur at the location specified by Axopar (the "*Service Location*"). This Limited Warranty gives the Purchaser specific legal rights and Purchaser may have other legal rights, which vary from state to state.

When used with these Limited Warranty terms, the following terms shall have the meanings set forth below:

"Handover Date" means the date the Purchaser first takes physical possession of the Boat for personal use. The Handover Date is evidenced by Purchaser-signed Handover Documentation or, if not provided to Axopar within ten (10) days, by other reasonable proof of delivery or possession. Where available, information contained in the Axopar Digital Product Passport may also be used to confirm the Handover Date, ownership transfer, and verified delivery history.

"Handover Documentation" means the Purchaser-signed delivery acknowledgment, handover checklist, bill of sale, or other written documentation confirming physical delivery of the Boat.

"Recreational Use" means use solely for personal enjoyment and non-commercial purposes.

"Commercial Use" means use for business, rental, charter, instruction, fishing operations, or any income-generating activity.

"Normal Operating Conditions" means use consistent with Axopar's Owner's Manual, recommended load, speed, and environmental limits.

"Improper Use" includes abuse, neglect, unauthorized modification, failure to maintain, or operation contrary to manufacturer instructions or applicable law.

"Material Detriment" means a defect that significantly impairs safe recreational use or reduces fair market value by a substantial amount.

"Axopar Digital Product Passport**"** means the secure, authenticated digital record issued for each Boat that contains verified information about that Boat's factory specifications, ownership history, warranty status, inspection records, and service history, accessible via the digital platform provided by Axopar, including through blockchain technology in partnership with the Aura Blockchain Consortium.

1. Applicability

This Limited Warranty is valid worldwide during the applicable warranty period and applies only to Boats purchased by consumers for Recreational Use and operated under Normal Operating Conditions and in compliance with the relevant Owner's Manual. Any warranty for Boats intended for Commercial Use must be separately agreed upon in writing between Axopar and the Purchaser. Notwithstanding the foregoing, in exceptional circumstances related to known health or safety issues (such as those addressed by Axopar service campaigns or mandatory corrective actions), limited warranty coverage may apply to a Commercial Use Boat if expressly agreed in writing between Axopar (or its authorized representative) and the Purchaser or Dealer.

The Limited Warranty also covers any equipment installed in the Boat by Axopar as an integral part of the delivery but excludes (i) equipment covered by a separate warranty, as further specified below in Sections 2 (Warranty Provider) and 3 (Warranty Period and Limitations) and (ii) any items installed by the Dealer in the Boat or included by the Dealer with the Boat. Equipment acquired by the Purchaser from third parties and which are not included in the original delivery are not covered under this Limited Warranty.

The hull identification number of the Boat and other particulars relevant to this Limited Warranty are recorded in the applicable sales contract and/or in the Boat's warranty certificate.

2. Warranty Provider

This Limited Warranty is provided solely by Axopar. Contact details are shown in the warranty certificate provided to the Purchaser upon delivery of the Boat. All warranties provided by the manufacturers and distributors of components, equipment and parts of the Boat are hereby assigned to the Purchaser to the extent permitted by the applicable manufacturers and distributors, as Purchaser's sole and exclusive remedy with respect to those items. Axopar provides no separate warranty for Third-Party Equipment.

3. Warranty Period and Limitations

The Limited Warranty is valid from the Handover Date, for the time periods identified below. Failure by the Dealer to transmit Handover Documentation does not delay or reduce coverage required by law but may affect administrative processing between Axopar and Dealer.

(A) *Five-Year Limited Warranty on Structural Hull:*

Axopar will repair or replace any substantial defect in material or workmanship in the Boat's structural hull that is reported within five years from the Handover Date. The structural hull means the fiberglass molded shell and all its integral structural components. A defect is substantial if it causes the Boat to be unfit or unsafe for general use as a pleasure craft under normal operating conditions.

(B) *Two-Year Limited Warranty on Components Manufactured or Installed by Axopar:*

Axopar will repair or replace any components manufactured or installed by Axopar that are defective in factory materials or workmanship and are reported within two years from the Handover Date (and are not already addressed in the specific warranties provided in paragraphs (A) and (C)).

(C) ***One-Year Limited Warranty on Upholstered Items, Canvas, Floor Materials, Other Coating and Painted Parts:***

Axopar will repair or replace any upholstered items, canvas, floor materials, other coating, and painted parts manufactured or installed by Axopar that are defective in factory materials or workmanship and are reported within one year from the Handover Date.

Boats used for demonstration or display prior to retail sale shall have warranty commencement on the earlier of (i) first operational use by Dealer, or (ii) twelve (12) months after shipment to Dealer. Axopar may limit coverage to one (1) year or 100 engine hours, whichever occurs first.

Cosmetic surface conditions, including gelcoat hairline cracks, are covered for 180 days from the Handover Date, subject to root cause analysis confirming manufacturing defect. After 180 days, cosmetic conditions are excluded. This provision controls over the cosmetic exclusions in Section 3(D)(3) during the first 180 days.

Front windshield glass and installation are warranted against manufacturing defects for six (6) months from the Handover Date.

(D) ***Exclusions***

This Limited Warranty does not apply to defects or damage arising from use other than under Normal Operating Conditions.

This Limited Warranty does not apply to defects or damage caused by Improper Use, including but not limited to the circumstances listed below.

The Limited Warranty does not apply to or cover the following items: (1) any costs incurred from hauling or transporting the Boat to and from the Service Location; (2) any equipment, components, parts or accessories not manufactured or installed by Axopar or that carry their own individual warranties provided by third parties, including but not limited to engines, propellers, pre-rigging equipment, batteries, generators, A/C units, steering mechanisms and other electronic equipment ("Third-Party Equipment"). Such Third-Party Equipment is covered solely by the individual manufacturer's warranty. Axopar assumes no liability for performance, service, or defects relating to Third-Party Equipment; (3) minor changes to the Boat's external surfaces that have no influence on the strength or serviceability of the Boat, including but not limited to any damage, deterioration, fading or discoloration or mold of cushions, cracking, fading or oxidation of gel coat, stress lines, anti-fouling bottom paint or other slight irregularities in paint work, lacquer work, woodwork or chrome finish or other minor surface blemishes; (4) windshield damage or leakage, except as expressly provided in Section 3 regarding limited windshield coverage; (5) any damage resulting from Purchaser's or a third party's negligence, willful misconduct, improper use of the Boat, overloading, powering in excess of the recommended maximum horsepower, improper rigging, misuse or alterations or repairs or attempted repairs on the Boat not authorized by Axopar, including use of an improper trailer, Boat lift or sling; (6) failure of the Purchaser or any third party to use, maintain or store the Boat as specified in the owner's manual, or any other failure to provide reasonable care and maintenance; (7) normal wear and tear items, including but not limited to ropes, filters, bulbs and batteries; (8) any representation or implication of the Boat's properties or characteristics, such as speed, weight, range, performance or fuel consumption; (9) any failure or defect not reported to Axopar or Dealer in accordance with Section 4 (Warranty Procedures) of this Limited Warranty; (10) any failure or defect arising from repairs made by unauthorized service providers; (11) any failure or defect arising from acts of nature; and (12) any Boat that was previously salvaged or declared a total loss or constructive loss for any reason.

(E) ***Circumstances Resulting in Loss or Suspension of Coverage***

Coverage under this Limited Warranty may be lost or suspended if: (1) Purchaser sells or otherwise conveys the Boat to a third party during the warranty period and the subsequent owner fails to notify Axopar of the transfer and provide required documentation within thirty (30) days, in which case warranty claim processing may be suspended until such documentation is received; (2) Purchaser uses the Boat in other than non-commercial activities; (3) the Boat is used in a competitive event; (4) any unauthorized modifications or changes are made to the Boat (e.g. structural modification or modifications to electrical systems on board or the programming of its engine or other systems); or (5) the Boat is salvaged or declared a total loss or constructive loss for any reason.

4. Warranty Procedures

To obtain warranty service, Purchaser must notify the Dealer within fourteen (14) calendar days of discovering the failure or defect or after Purchaser should have become aware of it. Upon detecting a defect, the Purchaser is required to take all reasonable steps necessary to prevent the defect from deteriorating further, including ceasing use where appropriate and protecting exposed areas. When reporting any defect, the Purchaser must provide the Boat's hull identification number, a copy of the warranty certificate, a reasonable number of clear and detailed photos of the defect, and a supported or documented explanation regarding when the Boat was purchased and the Dealer from which it was purchased.

After providing notice of the defect to the Dealer, the Dealer will notify Purchaser of the procedures to follow regarding this Limited Warranty. Dealer will then notify Axopar, and upon being notified of the warranty claim by Dealer, Axopar is solely responsible for determining and authorizing in writing the remedial action to be performed.

5. Axopar's Warranty Responsibilities

Axopar retains sole and final authority to determine warranty coverage, remedy, and repair method.

All warranty repairs must receive Axopar's prior written authorization before work begins, except as provided below.

Repairs necessary to prevent immediate safety hazard may be authorized up to USD 300 without prior approval, provided Axopar is notified within ten (10) days and supporting documentation is submitted.

Consistent with the foregoing, Axopar has the right to repair a defect covered by this Limited Warranty within a reasonable time and in a manner that does not result in repair costs or Material Detriment to the Purchaser. All repairs shall be carried out in a way and at the Service Location designated by Axopar.

Repairs shall be completed within reasonable time, not exceeding sixty (60) calendar days from verification of defect unless otherwise agreed.

If Axopar determines that repair is not possible after a reasonable number of attempts or if repair would result in Material Detriment, Purchaser has the right to a discount proportionate to the defect. Alternatively, Axopar may, in its sole discretion, offer to Purchaser a replacement Boat with a market value equal to the replaced Boat's market value (considering the Boat's age and condition) if it did not have that specific unrepairable defect.

If Axopar reasonably determines that the Boat defect is not covered by the Limited Warranty, Axopar has the right to charge the Purchaser for any costs that arise from inspecting and determining the defect and its cause. Any repair costs and expenses are subject to mutual agreement by Axopar and the Purchaser.

The remedies provided herein are intended to comply with applicable U.S. warranty law and shall not fail of their essential purpose.

6. Sole Remedy and Other Limitations

The repair, discount and replacement obligations specified in Section 5 (Axopar's Warranty Responsibilities) for parts or materials covered by this Limited Warranty are Purchaser's sole and exclusive remedy, and Axopar's sole obligations, for any claims whatsoever or any losses resulting from product failure. This Limited Warranty allocates risk between Purchaser and Axopar and reflects the purchase price of the Boat.

This Limited Warranty is the final, complete and exclusive warranty offered by Axopar regarding the Boat, and no other person or entity (including the Dealer or their respective sales agents or employees) is authorized to make any other warranties or representations on behalf of Axopar. **EXCEPT FOR THE EXPRESS LIMITED WARRANTIES PROVIDED IN THIS LIMITED WARRANTY, AXOPAR DISCLAIMS ALL OTHER EXPRESS AND IMPLIED WARRANTIES AND REPRESENTATIONS OF ANY KIND, INCLUDING ANY IMPLIED WARRANTY OF MERCHANTABILITY, AND FITNESS FOR A PARTICULAR PURPOSE. EXCEPT AS OTHERWISE PROVIDED IN THIS LIMITED WARRANTY, ALL BOATS ARE PROVIDED "AS IS" AND "WITH ALL FAULTS".** If and to the extent that an implied warranty cannot be disclaimed, that warranty is limited to duration of the respective express Limited Warranty provided herein. Some states do not allow the exclusion of implied warranties or do not allow limitations on the amount of time an implied warranty lasts, so the above limitations may not apply to some Purchasers.

To the extent permitted by applicable law, Axopar disclaims all liability to Purchaser and third parties for any economic loss arising from claims of product failure, negligence, defective design, lack of seaworthiness, manufacturing defect and any other liability not expressly covered in this Limited Warranty. **TO THE FULLEST EXTENT PERMITTED BY APPLICABLE LAW, NEITHER AXOPAR NOR DEALER SHALL UNDER ANY CIRCUMSTANCES BE LIABLE FOR ANY INDIRECT, CONSEQUENTIAL, SPECIAL, ENHANCED, OR PUNITIVE DAMAGES, INCLUDING LOSS OF THE BOAT, PROFIT, PRODUCTIVITY, BUSINESS, CONTRACTS, REVENUES OR ANTICIPATED SAVINGS, OR INCREASED COSTS OR EXPENSES, AND IN NO EVENT SHALL AXOPAR'S TOTAL CUMULATIVE LIABILITY EXCEED THE ACTUAL AMOUNT PAID BY PURCHASER FOR THE BOAT.** Some states do not allow the exclusion or limitation of incidental or consequential damages, so the above limitation or exclusion may not apply to every Purchaser.

Nothing in this Limited Warranty limits statutory rights that cannot be excluded under applicable law.

If, at any time, any provision of this Limited Warranty is or becomes illegal, invalid or unenforceable in any respect under the laws of any jurisdiction, the legality, validity or enforceability of the remaining provisions will remain unaffected.

This Limited Warranty may be transferred to a subsequent private owner provided Axopar receives written notice within thirty (30) days of resale together with proof of transfer and updated owner contact information. Failure to provide timely notice does not automatically void this Limited Warranty but may delay or suspend warranty administration until documentation is received.

7. Arbitration and Limitation on Actions

PLEASE READ THIS SECTION CAREFULLY. WE WANT YOU TO KNOW HOW IT AFFECTS YOUR RIGHTS.

(A) *Customer Service and FAQs*

In the unlikely event that an issue, concern or claim (including legal claims) remains unresolved after the procedure specified in Section 4 (Warranty Procedures) and the issue has been escalated to Axopar, Purchaser and Axopar each agree to discuss any issue informally for at least 30 days. Purchaser can do this by sending your full name and contact information, your concern and your requested solution to Axopar at service@axopar.com, Attn: Legal Department. If Axopar would like to discuss an issue with Purchaser, Axopar will contact you at the address provided to the Dealer.

(B) *Agreement to Arbitrate*

If an agreed solution is not reached at the end of the 30-day discussion period, Purchaser and Axopar each agree that any issue, concern or claim (including legal claims) that either may have arising out of or relating to this Limited Warranty must be resolved through final binding arbitration before the American Arbitration Association using its Consumer Arbitration Rules as in effect at the time arbitration is filed (2025 version or successor), available at https://adr.org/media/yawntdvs/2025_consumer_arbitration_rules.pdf (the "*AAA Rules*") or available by calling the American Arbitration Association at 1-800-778-7879. As an exception to this agreement to arbitrate, Axopar gives you the right to pursue in small claims court any claim that is within that court's jurisdiction, so long as you proceed solely on an individual basis. A party who intends to seek arbitration must first send to the other party, by certified or registered mail, a written notice of dispute. Purchaser may download or copy a form notice of dispute and a form to initiate arbitration from www.adr.org. Unless Purchaser and Axopar agree otherwise, the arbitration hearings will take place in a reasonably convenient location for both parties as determined by the arbitrator in accordance with the AAA Rules, and the hearings may be conducted in-person, by videoconference, phone or by the exchange of documents. The arbitrator's decision will be binding and may be enforced and entered as a judgment in any court of competent jurisdiction. If the arbitrator rules against Axopar, Axopar will reimburse Purchaser for reasonable attorneys' fees and costs, regardless of who initiated the arbitration. However, if the arbitrator rules in Axopar's favor, Axopar will not seek reimbursement of attorneys' fees and costs, regardless of who initiated the arbitration. This

arbitration provision is intended to comply with the American Arbitration Association Consumer Due Process Protocol.

(C) *Time Limitation; No Class Actions*

To help resolve any issues between us promptly and directly, Axopar and Purchaser agree to begin any arbitration under this Limited Warranty within one year after the claim first arose; otherwise, the claim is waived. Axopar and Purchaser also agree to arbitrate in each of our individual capacities only – not as a representative or member of a class – and each of us expressly waives any right to file a class action or seek relief on a class action basis. Furthermore, unless Purchaser and Axopar agree in writing, the arbitrator may not consolidate more than one person's claims and may not otherwise preside over any form of a representative of class proceeding.

(D) *Confidentiality*

All arbitration proceedings are confidential, unless both Purchaser and Axopar agree otherwise. Arbitration orders and awards required to be filed with applicable courts of competent jurisdiction are not confidential and may be disclosed by the parties to such courts. A party who improperly discloses confidential information will be subject to sanctions. The arbitrator and forum may disclose case filings, case dispositions, and other case information as required by a court order of proper jurisdiction.

Appendix V: Warranty Terms - Non-US

Warranty Terms for boats built before 1st of June 2026

© 2026 Axopar Boats

AXOPAR

Limited Warranty for Axopar Boats

Non-US version 1.0

Limited Warranty

Axopar Boats Ltd ("*Axopar*") warrants to the original retail purchaser ("*Purchaser*") of an Axopar boat manufactured and equipped with a hull identification number by Axopar ("*Boat*") and sold at retail by an authorized dealer ("*Dealer*") that Axopar will repair or replace defective materials and workmanship found during the applicable warranty period, subject to the limitations, exclusions and other conditions provided below. The decision to repair or replace will be made by Axopar in its sole discretion, and all repairs must occur at the location specified by Axopar (the "*Service Location*"). This Limited Warranty gives the Purchaser specific legal rights and Purchaser may have other legal rights, which vary from country to country.

1. Applicability

This Limited Warranty is valid worldwide during the applicable warranty period and applies only to Boats purchased by consumers and operated under normal, non-commercial use in compliance with the relevant Axopar owner's manual. Any warranty for Boats intended for commercial use must be separately agreed upon in writing between Axopar and the Purchaser.

The Limited Warranty also covers any equipment installed in the Boat by Axopar as an integral part of the delivery but excludes (i) equipment covered by a separate warranty, as further specified below in Sections 2 (Warranty Provider) and 3 (Warranty Period and Limitations) and (ii) any items installed by the Dealer in the Boat or included by the Dealer with the Boat. Equipment acquired by the Purchaser from third parties and which are not included in the original delivery are not covered under this Limited Warranty.

The hull identification number of the Boat and other particulars relevant to this Limited Warranty are recorded in the applicable sales contract and/or in the Boat's warranty certificate.

2. Warranty Provider

This Limited Warranty is provided solely by Axopar. Contact details are shown in the warranty certificate provided to the Purchaser upon delivery of the Boat. All warranties provided by the manufacturers and distributors of components, equipment and parts of the Boat are hereby assigned to the Purchaser to the extent permitted by the applicable manufacturers and distributors, as Purchaser's sole and exclusive remedy with respect to those items.

3. Warranty Period and Limitations

The Limited Warranty is valid from the delivery date of the Boat to the Purchaser, as reflected in the Boat's warranty certificate (the "*Delivery Date*"), for the time periods identified below.

(A) ***Five-Year Limited Warranty on Structural Hull:***

Axopar will repair or replace any substantial defect in material or workmanship in the Boat's structural hull that is reported within five years from the Delivery Date. The structural hull means the fiberglass molded shell and all its integral structural components. A defect is substantial if it causes the Boat to be unfit or unsafe for general use as a pleasure craft under normal operating conditions.

(B) ***Two-Year Limited Warranty on Components Manufactured or Installed by Axopar:***

Axopar will repair or replace any components manufactured or installed by Axopar that are defective in factory materials or workmanship and are reported within two years from the Delivery Date (and are not already addressed in the specific warranties provided in paragraphs (A) and (C)).

(C) ***One-Year Limited Warranty on Upholstered Items, Canvas, Floor Materials, Other Coating and Painted Parts:***

Axopar will repair or replace any upholstered items, canvas, floor materials, other coating, and painted parts manufactured or installed by Axopar that are defective in factory materials or workmanship and are reported within one year from the Delivery Date.

(D) ***Exclusions***

The Limited Warranty does not apply to or cover the following items: (1) any costs incurred from hauling or transporting the Boat to and from the Service Location; (2) any equipment, parts or accessories not installed by Axopar or that carry their own individual warranties provided by third parties, including but not limited to engines, propellers, pre-rigging equipment, batteries, generators, A/C units, steering mechanisms and other electronic equipment; (3) minor changes to the Boat's external surfaces that have no influence on the strength or serviceability of the Boat, including but not limited to any damage, deterioration, fading or discoloration or mold of cushions, cracking, fading or oxidation of gel coat, stress lines, anti-fouling bottom paint or other slight irregularities in paint work, lacquer work, woodwork or chrome finish or other minor surface blemishes; (4) windshield damage or leakage; (5) any damage resulting from Purchaser's or a third party's negligence, willful misconduct, improper use of the Boat, overloading, powering in excess of the recommended maximum horsepower, improper rigging, misuse or alterations or repairs or attempted repairs on the Boat not authorized by Axopar, including use of an improper trailer, Boat lift or sling; (6) failure of the Purchaser or any third party to use, maintain or store the Boat as specified in the owner's manual, or any other failure to provide reasonable care and maintenance; (7) normal wear and tear items, including but not limited to ropes, filters, bulbs and batteries; (8) any representation or implication of the Boat's properties or characteristics, such as speed, weight, range, performance or fuel consumption; (9) any failure or defect not reported to Axopar or Dealer in accordance with Section 4 (Warranty Procedures) of this Limited Warranty; (10) any failure or defect arising from repairs made by unauthorized service providers; (11) any failure or defect arising from acts of nature; and (12) any Boat that was previously salvaged or declared a total loss or constructive loss for any reason.

(E) ***Voiding the Limited Warranty***

This warranty becomes void if: (1) Purchaser sells or otherwise conveys the Boat to a third party during the warranty period and Axopar is not provided with the bill of sale of the Boat

and/or the contact information of the new owner; (2) Purchaser uses the Boat in other than non-commercial activities; (3) the Boat is used in a competitive event; (4) any unauthorized modifications or changes are made to the Boat (e.g. structural modification or modifications to electrical systems on board or the programming of its engine or other systems); or (5) the Boat is salvaged or declared a total loss or constructive loss for any reason.

4. Warranty Procedures

To obtain warranty service, Purchaser must notify the Dealer about the failure or defect within a reasonable time after becoming aware of it or after Purchaser should have become aware of it. Upon detecting a defect, the Purchaser is required to take all reasonable steps necessary to prevent the defect from deteriorating further. When reporting any defect, the Purchaser must provide the Boat's hull identification number, a copy of the warranty certificate, a reasonable number of clear and detailed photos of the defect, and a supported or documented explanation regarding when the Boat was purchased and the Dealer from which it was purchased.

After providing notice of the defect to the Dealer, the Dealer will notify Purchaser of the procedures to follow regarding this Limited Warranty. Dealer will then notify Axopar, and upon being notified of the warranty claim by Dealer, Axopar is solely responsible for determining and authorizing in writing the remedial action to be performed.

5. Axopar's Warranty Responsibilities

Axopar has always the right to repair a defect covered by this Limited Warranty if, in view of the nature and extent of the defect, it can be done within a reasonable time and in such a way that it does not result in repair costs or material detriment to the Purchaser. All repairs shall be carried out in a way and at the Service Location designated by Axopar.

If Axopar determines that repair is not possible, Purchaser has the right to a discount proportionate to the defect. Alternatively, Axopar may, in its sole discretion, offer to Purchaser a replacement Boat with a market value equal to the replaced Boat's market value (considering the Boat's age and condition) if it did not have that specific unrepairable defect.

If Axopar reasonably determines that the Boat defect is not covered by the Limited Warranty, Axopar has the right to charge the Purchaser for any costs that arise from inspecting and determining the defect and its cause. Any repair costs and expenses are subject mutual agreement by Axopar and the Purchaser.

6. Sole Remedy and Other Limitations

The repair, discount and replacement obligations specified in Section 5 (Axopar's Warranty Responsibilities) for parts or materials covered by this Limited Warranty are Purchaser's sole and exclusive remedy, and Axopar's sole obligations, for any claims whatsoever or any losses resulting from product failure.

This Limited Warranty the final, complete and exclusive warranty offered by Axopar regarding the Boat, and no other person or entity (including the Dealer or its respective sales agents or employees) is authorized to make any other warranties or representations on behalf of Axopar. **EXCEPT FOR THE EXPRESS LIMITED WARRANTIES PROVIDED IN THIS LIMITED WARRANTY, AXOPAR DISCLAIMS ALL OTHER EXPRESS AND IMPLIED WARRANTIES AND REPRESENTATIONS OF ANY KIND, INCLUDING ANY IMPLIED WARRANTY OF MERCHANTABILITY, AND FITNESS FOR A PARTICULAR PURPOSE. EXCEPT AS OTHERWISE PROVIDED IN THIS LIMITED WARRANTY, ALL BOATS ARE PROVIDED "AS IS" AND "WITH ALL FAULTS".** If and to the extent that an implied warranty cannot be disclaimed, that warranty is limited to duration of the respective express Limited Warranty provided herein. Some countries do not allow the exclusion of implied warranties or do not allow limitations on the amount of time an implied warranty lasts, so the above limitations may not apply to some Purchasers.

To the extent permitted by applicable law, Axopar disclaims all liability to Purchaser and third parties for any economic loss arising from claims of product failure, negligence, defective design, lack of seaworthiness, manufacturing defect and any other liability not expressly covered in this Limited Warranty. **TO THE EXTENT PERMITTED BY APPLICABLE LAW, NEITHER AXOPAR NOR DEALER SHALL UNDER ANY CIRCUMSTANCES BE LIABLE FOR ANY INDIRECT, CONSEQUENTIAL, SPECIAL, ENHANCED, OR PUNITIVE DAMAGES, INCLUDING LOSS OF THE BOAT, PROFIT, PRODUCTIVITY, BUSINESS, CONTRACTS, REVENUES OR ANTICIPATED SAVINGS, OR INCREASED COSTS OR EXPENSES, AND IN NO EVENT SHALL AXOPAR'S LIABILITY EXCEED THE ACTUAL AMOUNT PAID BY PURCHASER FOR THE BOAT.** Some countries do not allow the exclusion or limitation of incidental or consequential damages, so the above limitation or exclusion may not apply to every Purchaser.

If, at any time, any provision of this Limited Warranty is or becomes illegal, invalid or unenforceable in any respect under the laws of any jurisdiction, the legality, validity or enforceability of the remaining provisions will remain unaffected.

7. Arbitration and Limitation on Actions

PLEASE READ THIS SECTION CAREFULLY. WE WANT YOU TO KNOW HOW IT AFFECTS YOUR RIGHTS.

(A) *Customer Service and FAQs*

In the unlikely event that an issue, concern or claim (including legal claims) remains unresolved after the procedure specified in Section 4 (Warranty Procedures) and the issue has been escalated to Axopar, Purchaser and Axopar each agree to discuss any issue informally for at least 30 days. Purchaser can do this by sending your full name and contact information, your concern and your requested solution to Axopar at warranty@axopar.fi, Attn: Legal Department. If Axopar would like to discuss an issue with Purchaser, Axopar will contact you at the address provided to the Dealer.

(B) *Agreement to Arbitrate*

If an agreed solution is not reached at the end of the 30-day discussion period, Purchaser and Axopar each agree that any issue, concern or claim (including legal claims) that either may have arising out of or relating to this Limited Warranty must be resolved through final binding arbitration. The arbitrator's decision will be binding and may be enforced and entered as a judgment in any court of competent jurisdiction. If the arbitrator rules against Axopar, Axopar will reimburse Purchaser for reasonable attorneys' fees and costs, regardless of who initiated the arbitration. However, if the arbitrator rules in Axopar's favor, Axopar will not seek reimbursement of attorneys' fees and costs, regardless of who initiated the arbitration.

(C) *Time Limitation; No Class Actions*

To help resolve any issues between us promptly and directly, Axopar and Purchaser agree to begin any arbitration under this Limited Warranty within one year after the claim first arose; otherwise, the claim is waived. Axopar and Purchaser also agree to arbitrate in each of our individual capacities only – not as a representative or member of a class – and each of us expressly waives any right to file a class action or seek relief on a class action basis. Furthermore, unless Purchaser and Axopar agree in writing, the arbitrator may not consolidate more than one person's claims and may not otherwise preside over any form of a representative of class proceeding.

(D) *Confidentiality*

All arbitration proceedings are confidential, unless both Purchaser and Axopar agree otherwise. Arbitration orders and awards required to be filed with applicable courts of competent jurisdiction are not confidential and may be disclosed by the parties to such courts. A party who improperly discloses confidential information will be subject to sanctions. The arbitrator and forum may disclose case filings, case dispositions, and other case information as required by a court order of proper jurisdiction.

Warranty Terms for boats built from 1st of June 2026 onwards

© 2026 Axopar Boats

AXOPAR

Limited Warranty for Axopar Boats

Non-US version 1.1 (May 2026)

Limited Warranty

This Limited Warranty is a voluntary commercial warranty provided by Axopar and does not limit any mandatory statutory rights that the Purchaser may have under applicable consumer protection laws.

Axopar Boats Ltd ("***Axopar***") warrants to the original retail purchaser ("***Purchaser***") of an Axopar boat manufactured and equipped with a hull identification number by Axopar ("***Boat***") and sold at retail by an authorized dealer ("***Dealer***") that Axopar will repair or replace defective materials and workmanship found during the applicable warranty period, subject to the limitations, exclusions and other conditions provided below. The decision to repair or replace will be made by Axopar in its sole discretion, and all repairs must occur at the location specified by Axopar (the "*Service Location*"). This Limited Warranty gives the Purchaser specific legal rights and Purchaser may have other legal rights, which vary from country to country.

When used with these Limited Warranty terms, the following terms shall have the meanings set forth below:

"**Handover Date**" means the date the Purchaser first takes physical possession of the Boat for personal use. The Handover Date is evidenced by Purchaser-signed Handover Documentation or, if not provided to Axopar within ten (10) days, by other reasonable proof of delivery or possession. Where available, information contained in the Axopar Digital Product Passport may also be used to confirm the Handover Date, ownership transfer, and verified delivery history.

"**Handover Documentation**" means the Purchaser-signed delivery acknowledgment, handover checklist, bill of sale, or other written documentation confirming physical delivery of the Boat.

"**Recreational Use**" means use solely for personal enjoyment and non-commercial purposes.

"**Commercial Use**" means use for business, rental, charter, instruction, fishing operations, or any income-generating activity.

"**Normal Operating Conditions**" means use consistent with Axopar's Owner's Manual, recommended load, speed, and environmental limits.

"**Improper Use**" includes abuse, neglect, unauthorized modification, failure to maintain, or operation contrary to manufacturer instructions or applicable law.

"**Material Detriment**" means a defect that significantly impairs safe recreational use or reduces fair market value by a substantial amount.

"Axopar Digital Product Passport" means the secure, authenticated digital record issued for each Boat that contains verified information about that Boat's factory specifications, ownership history, warranty status, inspection records, and service history, accessible via the digital platform provided by Axopar, including through blockchain technology in partnership with the Aura Blockchain Consortium.

1. Applicability

This Limited Warranty is valid outside the United States during the applicable warranty period and applies only to Boats purchased by consumers for Recreational Use and operated under Normal Operating Conditions and in compliance with the relevant Axopar Owner's Manual. Any warranty for Boats intended for Commercial Use must be separately agreed upon in writing between Axopar and the Purchaser. Notwithstanding the foregoing, in exceptional circumstances related to known health or safety issues, including service campaigns or mandatory corrective actions, limited warranty coverage may apply to a Commercial Use Boat if expressly agreed in writing between Axopar or its authorized representative and the Purchaser or Dealer. Nothing in this Limited Warranty limits mandatory statutory rights that cannot be excluded under applicable law.

The Limited Warranty also covers any equipment installed in the Boat by Axopar as an integral part of the delivery but excludes (i) equipment covered by a separate warranty, as further specified below in Sections 2 (Warranty Provider) and 3 (Warranty Period and Limitations) and (ii) any items installed by the Dealer in the Boat or included by the Dealer with the Boat. Equipment acquired by the Purchaser from third parties and which are not included in the original delivery are not covered under this Limited Warranty.

The hull identification number of the Boat and other particulars relevant to this Limited Warranty are recorded in the applicable sales contract and/or in the Boat's warranty certificate.

2. Warranty Provider

This Limited Warranty is provided solely by Axopar. Contact details are shown in the warranty certificate provided to the Purchaser upon delivery of the Boat. All warranties provided by the manufacturers and distributors of components, equipment and parts of the Boat are hereby assigned to the Purchaser to the extent permitted by the applicable manufacturers and distributors, as Purchaser's sole and exclusive remedy with respect to those items. Axopar provides no separate warranty for Third-Party Equipment.

3. Warranty Period and Limitations

The Limited Warranty is valid from the Handover Date for the time periods identified below. Failure by the Dealer to transmit Handover Documentation does not delay or reduce coverage required by law, but may affect administrative processing between Axopar and Dealer.

(A) ***Five-Year Limited Warranty on Structural Hull:***

Axopar will repair or replace any substantial defect in material or workmanship in the Boat's structural hull that is reported within five years from the Handover Date. The structural hull means the fiberglass molded shell and all its integral structural components. A defect is substantial if it causes the Boat to be unfit or unsafe for general use as a pleasure craft under normal operating conditions.

(B) ***Two-Year Limited Warranty on Components Manufactured or Installed by Axopar:***

Axopar will repair or replace any components manufactured or installed by Axopar that are defective in factory materials or workmanship and are reported within two years from the Handover Date (and are not already addressed in the specific warranties provided in paragraphs (A) and (C)).

(C) ***One-Year Limited Warranty on Upholstered Items, Canvas, Floor Materials, Other Coating and Painted Parts:***

Axopar will repair or replace any upholstered items, canvas, floor materials, other coating, and painted parts manufactured or installed by Axopar that are defective in factory materials or workmanship and are reported within one year from the Handover Date.

Boats used for demonstration or display prior to retail sale shall have warranty commencement on the earlier of (i) first operational use by Dealer, or (ii) twelve (12) months after shipment to Dealer. Axopar may limit coverage to one (1) year or 100 engine hours, whichever occurs first, except to the extent otherwise required by mandatory applicable law.

Cosmetic surface conditions, including gelcoat hairline cracks, are covered for 180 days from the Handover Date, subject to root cause analysis confirming a manufacturing defect. After 180 days, cosmetic conditions are excluded, except to the extent otherwise required by mandatory applicable law. This provision controls over the cosmetic exclusions in Section 3(D)(3) during the first 180 days.

Front windshield glass and installation are warranted against manufacturing defects for six (6) months from the Handover Date, except to the extent otherwise required by mandatory applicable law.

(D) ***Exclusions***

This Limited Warranty does not apply to defects or damage arising from use other than under Normal Operating Conditions.

This Limited Warranty does not apply to defects or damage caused by Improper Use, including but not limited to the circumstances listed below.

The Limited Warranty does not apply to or cover the following items: (1) any costs incurred from hauling or transporting the Boat to and from the Service Location; (2) any equipment, components, parts or accessories not manufactured or installed by Axopar or that carry their own individual warranties provided by third parties, including but not limited to engines, propellers, pre-rigging equipment, batteries, generators, A/C units, steering mechanisms and other electronic equipment ("**Third-Party Equipment**"). Such Third-Party Equipment is covered solely by the individual manufacturer's or supplier's warranty, to the extent available. Axopar assumes no liability for performance, service, or defects relating to Third-Party Equipment, except to the extent such liability cannot be excluded under applicable law; (3) minor changes to the Boat's external surfaces that have no influence on the strength or serviceability of the Boat, including but not limited to any damage, deterioration, fading or discoloration or mold of cushions, cracking, fading or oxidation of gel coat, stress lines, anti-fouling bottom paint or other slight irregularities in paint work, lacquer work, woodwork or chrome finish or other minor surface blemishes; (4) windshield damage or leakage, except as expressly provided in Section 3 regarding limited windshield coverage; (5) any damage resulting from Purchaser's or a third party's negligence, willful misconduct, improper use of the Boat, overloading, powering in excess of the recommended maximum horsepower, improper rigging, misuse or alterations or repairs or attempted repairs on the Boat not authorized by Axopar, including use of an improper trailer, Boat lift or sling; (6) failure of the Purchaser or any third party to use, maintain or store the Boat as specified in the owner's manual, or any other failure to provide reasonable care and maintenance; (7) normal wear and tear items, including but not limited to ropes, filters, bulbs and batteries; (8) any representation or implication of the Boat's properties or characteristics, such as speed, weight, range, performance or fuel consumption; (9) any failure or defect not reported to Axopar or Dealer in accordance with Section 4 (Warranty Procedures) of this Limited Warranty; (10) any failure or defect arising from repairs made by unauthorized service providers; (11) any failure or defect arising from acts of nature; and (12) any Boat that was previously salvaged or declared a total loss or constructive loss for any reason.

(E) ***Circumstances Resulting in Loss or Suspension of Coverage***

Coverage under this Limited Warranty may be lost or suspended if: (1) Purchaser sells or otherwise conveys the Boat to a third party during the warranty period and the subsequent owner fails to notify Axopar of the transfer and provide required documentation within thirty (30) days, in which case warranty claim processing may be suspended until such documentation is received; (2) Purchaser uses the Boat in other than non-commercial activities; (3) the Boat is used in a competitive event; (4) any unauthorized modifications or changes are made to the Boat (e.g. structural modification or modifications to electrical systems on board or the programming of its engine or other systems); or (5) the Boat is salvaged or declared a total loss or constructive loss for any reason.

4. Warranty Procedures

To obtain warranty service, Purchaser must notify the Dealer within fourteen (14) calendar days of discovering the failure or defect or after Purchaser should have become aware of it, unless a longer period is required under mandatory applicable law. Upon detecting a defect, the Purchaser is required to take all reasonable steps necessary to prevent the defect from deteriorating further, including ceasing use where appropriate and protecting exposed areas. When reporting any defect, the Purchaser must provide the Boat's hull identification number, a copy of the warranty certificate, a reasonable number of clear and detailed photos of the defect, and a supported or documented explanation regarding when the Boat was purchased and the Dealer from which it was purchased.

After providing notice of the defect to the Dealer, the Dealer will notify Purchaser of the procedures to follow regarding this Limited Warranty. Dealer will then notify Axopar, and upon being notified of the warranty claim by Dealer, Axopar is solely responsible for determining and authorizing in writing the remedial action to be performed.

5. Axopar's Warranty Responsibilities

Axopar retains sole and final authority to determine warranty coverage, remedy, and repair method.

All warranty repairs must receive Axopar's prior written authorization before work begins, except as provided below.

Repairs necessary to prevent an immediate safety hazard may be authorized up to EUR 300 without prior approval, provided Axopar is notified within ten (10) days and supporting documentation is submitted.

Consistent with the foregoing, Axopar has the right to repair a defect covered by this Limited Warranty within a reasonable time and in a manner that does not result in repair costs or Material Detriment to the Purchaser. All repairs shall be carried out in a way and at the Service Location designated by Axopar.

Repairs shall be completed within a reasonable time, not exceeding sixty (60) calendar days from verification of defect unless otherwise agreed or unless a longer period is reasonably required due to the nature of the repair, availability of parts, transport, location of the Boat, seasonal conditions, or other circumstances outside Axopar's reasonable control.

If Axopar determines that repair is not possible after a reasonable number of attempts or if repair would result in Material Detriment, Purchaser has the right to a discount proportionate to the defect. Alternatively, Axopar may, in its sole discretion, offer to Purchaser a replacement Boat with a market value equal to the replaced Boat's market value, considering the Boat's age and condition, if it did not have that specific unrepairable defect.

If Axopar reasonably determines that the Boat defect is not covered by the Limited Warranty, Axopar has the right to charge the Purchaser for costs that arise from inspecting and determining the defect and its cause, except to the extent prohibited by applicable law. Any repair costs and expenses are subject to mutual agreement by Axopar and the Purchaser.

6. Sole Remedy and Other Limitations

The repair, discount and replacement obligations specified in Section 5 (Axopar's Warranty Responsibilities) for parts or materials covered by this Limited Warranty are Purchaser's sole and exclusive remedy, and Axopar's sole obligations, for any claims whatsoever or any losses resulting from product failure.

This Limited Warranty is the final, complete and exclusive warranty offered by Axopar regarding the Boat, and no other person or entity (including the Dealer or its respective sales agents or employees) is authorized to make any other warranties or representations on behalf of Axopar. **EXCEPT FOR THE EXPRESS LIMITED WARRANTIES PROVIDED IN THIS LIMITED WARRANTY, AXOPAR DISCLAIMS ALL OTHER EXPRESS AND IMPLIED WARRANTIES AND REPRESENTATIONS OF ANY KIND, INCLUDING ANY IMPLIED WARRANTY OF MERCHANTABILITY, AND FITNESS FOR A PARTICULAR PURPOSE. EXCEPT AS OTHERWISE PROVIDED IN THIS LIMITED WARRANTY AND TO THE EXTENT PERMITTED BY APPLICABLE LAW, ALL BOATS ARE PROVIDED "AS IS" AND "WITH ALL FAULTS".** If and to the extent that an implied warranty cannot be disclaimed, that warranty is limited to duration of the respective express Limited Warranty provided herein. Some countries do not allow the exclusion of implied warranties or do not allow limitations on the amount of time an implied warranty lasts, so the above limitations may not apply to some Purchasers.

To the extent permitted by applicable law, Axopar disclaims all liability to Purchaser and third parties for any economic loss arising from claims of product failure, negligence, defective design, lack of seaworthiness, manufacturing defect and any other liability not expressly covered in this Limited Warranty. **TO THE EXTENT PERMITTED BY APPLICABLE LAW, NEITHER AXOPAR NOR DEALER SHALL UNDER ANY CIRCUMSTANCES BE LIABLE FOR ANY INDIRECT, CONSEQUENTIAL, SPECIAL, ENHANCED, OR PUNITIVE DAMAGES, INCLUDING LOSS OF THE BOAT, PROFIT, PRODUCTIVITY, BUSINESS, CONTRACTS, REVENUES OR ANTICIPATED SAVINGS, OR INCREASED COSTS OR EXPENSES, AND IN NO EVENT SHALL AXOPAR'S TOTAL CUMULATIVE LIABILITY UNDER THIS LIMITED WARRANTY EXCEED THE ACTUAL AMOUNT PAID BY PURCHASER FOR THE BOAT.** Some countries do not allow the exclusion or limitation of incidental or consequential damages, so the above limitation or exclusion may not apply to every Purchaser.

Nothing in this Limited Warranty limits mandatory statutory rights that cannot be excluded under applicable law.

If, at any time, any provision of this Limited Warranty is or becomes illegal, invalid or unenforceable in any respect under the laws of any jurisdiction, the legality, validity or enforceability of the remaining provisions will remain unaffected.

This Limited Warranty may be transferred to a subsequent private owner provided Axopar receives written notice within thirty (30) days of resale together with proof of transfer and updated owner contact information. Failure to provide timely notice does not automatically void this Limited Warranty but may delay or suspend warranty administration until documentation is received.

7. Dispute Resolution and Limitation on Actions

PLEASE READ THIS SECTION CAREFULLY. WE WANT YOU TO KNOW HOW IT AFFECTS YOUR RIGHTS.

(A) *Customer Service and FAQs*

In the unlikely event that an issue, concern or claim (including legal claims) remains unresolved after the procedure specified in Section 4 (Warranty Procedures) and the issue has been escalated to Axopar, Purchaser and Axopar each agree to discuss any issue informally for at least thirty (30) days. Purchaser can do this by sending Purchaser's full name and contact information, concern and requested solution to Axopar at service@axopar.com, Attn: Legal Department. If Axopar would like to discuss an issue with Purchaser, Axopar will contact you at the address provided to the Dealer.

(B) *Governing Law and Forum*

This Limited Warranty shall be governed by the laws of Finland, excluding its conflict of laws rules, unless mandatory applicable consumer protection laws require otherwise. Any dispute, controversy or claim arising out of or relating to this Limited Warranty shall be finally resolved by arbitration under the Arbitration Rules of the Finland Chamber of Commerce. The seat of arbitration shall be Helsinki, Finland. The number of arbitrators shall be one (1). The language of arbitration shall be English. The arbitrator's decision will be binding and may be enforced and entered as a judgment in any court of competent jurisdiction. If the arbitrator rules against Axopar, Axopar will reimburse Purchaser for reasonable attorneys' fees and costs, regardless of who initiated the arbitration. However, if the arbitrator rules in Axopar's favor, Axopar will not seek reimbursement of attorneys' fees and costs, regardless of who initiated the arbitration.

Mandatory consumer law carve-out:

Nothing in this Section limits any mandatory right of a Purchaser acting as a consumer to submit a complaint to, or seek assistance from, any competent consumer protection authority, consumer ombudsman, alternative dispute resolution body, or court in the country or jurisdiction where the Purchaser is domiciled, if and to the extent such right cannot be excluded under applicable law.

For Purchasers domiciled in the European Union or European Economic Area, this includes any mandatory right to refer a consumer dispute to a competent national consumer alternative dispute resolution body or consumer authority, where such right is available under applicable law.

(C) *Time Limitation; No Class Actions*

To the extent permitted by applicable law, Axopar and Purchaser agree to begin any arbitration or any other permitted proceeding under this Limited Warranty within one (1) year after the claim first arose; otherwise, the claim is waived. To the extent permitted by applicable law, Axopar and Purchaser also agree to

proceed only in their individual capacities and not as a representative or member of a class – and each expressly waives any right to file a class action or seek relief on a class action basis. Furthermore, unless Purchaser and Axopar agree in writing, the arbitrator may not consolidate more than one person's claims and may not otherwise preside over any form of a representative of class proceeding.

(D) *Confidentiality*

All arbitration proceedings are confidential, unless both Purchaser and Axopar agree otherwise or disclosure is required by applicable law, court order, or the rules of the arbitration forum. Arbitration orders and awards required to be filed with applicable courts of competent jurisdiction are not confidential and may be disclosed by the parties to such courts. A party who improperly discloses confidential information will be subject to sanctions. The arbitrator and forum may disclose case filings, case dispositions, and other case information as required by a court order of proper jurisdiction.